Town Crier of Wilmington

Copyright 1972

Wilmington Public Library
Wilmington, Ma 01887

Copy #2

17TH YEAR-NO. 11 | WILMINGTON, MASS., THURSDAY, MARCH 23, 1972 | FIFTEEN CENTS

$52.60 in Taxes Voted - So Far

TOWN MEETING GIVES T.M. GOOD REASONS FOR HIGHER TAXES

Wilmington's second session of the Annual Town Meeting went right through to a finish, last Saturday, after a late start. Without ever losing a quorum, in spite of voters going out to smoke, the Town Meeting completed its business in six hours.

Town Manager Sterling Morris will probably be hiring two new policemen, to augment the Wilmington Police Department, as a result of the earliest vote, which appropriated $8000 additional for the Police. Morris told the Town Meeting that he would be short 561 man hours a year, as a result of the new work schedule of six days on and two off. Bernard Nally, president of the Police Association told the Town Meeting "we hope we don't need it".

For the first time in years there was no appropriation for the DAV Clubhouse, on Grove Avenue. Both the Legion and the VFW had a vote of $750 for clubhouse rent.

Town Manager Sterling Morris received a blow directed by about a dozen voters, when the Town Meeting refused to vote for an industrial commission and a separate financing authority.

Roger Jewett, Director of the State Bureau of Commerce and Industrial Development told the Town Meeting that the power of the commission would be advisory to the Board of Selectmen. Bonds would be sold to help develop new buildings for industrial firms, the meeting was told, and those bonds would not reflect the credit of the town, but would bear 2% less interest than regular bonds, because they are tax exempt. The Finance Committee approved, and Selectman Boylen was among those who spoke in favor.

The fight against the power was led by Mrs. Jean Pederson of Federal Street and Mrs. Madelyn McKie of the Finance Committee.

Mrs. Barbara Hooper of the School Committee spoke against the proposal, as did Danny Gillis, who said that he was not in opposition but did not feel that the Town needed the incentive.

Chairman Richard Barry of the Finance Committee told the Town Meeting that there was ample control, and that the Selectmen would have ample power. He was followed by Carl Backman, Chairman of the Board of Selectmen, who agreed with Barry.

Former Selectman James Miceli spoke against the article, as did Arthur Miner of 16 Marjorie Road who said that the town should build schools and forget about industry.

Mrs. McKie opposes the Industrial Proposals

The vote was Yes 68, and No. 127.

The Planning Board took a defeat from the voters, on their proposal to redistrict bringing articles into the Town Meeting, if they have been defeated in the previous year, under Article 18. Selectman Mike Caira was among those who spoke to defeat it.

Likewise a proposal to amend the definitions of High Density Zoning was defeated, by Atty. Roland Wood and Mrs. McKie. But a proposal to make the minimum frontage for a business lot equal 100 feet passed 127 to 35.

PUD Goes Thud

The long, comples proposal for rezoning, prepared by the Planning Board during the past few years, and known familiarly as PUD (Planned Unit Development) was decisively rejected by the Town. It was marked by a Minority Report from Bob Leahy, and a fifteen minute explanation by Zane Bower of the Planning Board, during which many voters went out for a smoke. The final vote was 24 in favor, 187 against.

Two of the highlights of the discussion were by Stanley Webber and Selectman Caira. Webber pointed out that the definition of a family in the proposed by-law was at fault, and that the Charles Manson family of California could be said to be conforming to the by-law. Caira said that the Planning Board was just confusing the issue, that the people had asked for Limited Garden Apartments, and had waited "and if the Planning Board cannot do it, it is time someone else does". "No one wants what is presented here - so full of contradictions it is absured". While he thus spoke he held the proposed zoning in two fingers, as if it were some sort of refuse.

But, on the suggestion of Selectman Danny Gillis the Town Meeting gave applause to the Planning Board, for the amount of time they had spent on studying the Planned Unit Development.

ZANE BOWER: Of the Planning Board, and one of the charts he had made to illustrate the problems he discussed in P.U.D.

$30,000 was voted to allow the Selectmen to conduct land surveys for new dump areas, in Wilmington.

A Flood Plain zoning by-law was enacted, 146 to 3, and afterwards land along the Shawsheen River was voted into the first Flood Plain District. Chairman Frank Otatti, Chairman, was commended for his presentation of slides showing the Town of Sudbury. Mr. Otatti assured the Town Meeting that the committee had subjected its proposals to the scrutiny of the Attorney General's Office, and that changes had been made accordingly.

New Building By-Laws were passed, 169 to 4.

An article to build a town owned skating rink was passed over on a motion by Carl Backman, Chairman of the Board of Selectmen.

The Town Meeting voted to give the Board of Selectmen sole power over the removal of gravel in Wilmington. Town Counsel Alan Altman spoke to say that the method proposed was the best method, and that this would be consistent with the By-Law which had just been voted.

Among those who opposed was Zane Bower of the Planning Board and former Selectman James Miceli. Miceli thought that the powers should be divided between the Selectmen and the Board of Appeals.

The next to last article was for rezoning of land off Aldrich Road. Atty. Joseph Courtney won handily, 132 in favor, 18 against. Christian Bachman of the Finance Committee characterized the article as one in which "everyone wins".

Earl Hupper's article for the rezoning of land along the Reading Line, presented at 7:22 pm took only a few minutes. It was voted with hardly any dissent, and the 1972 Town Meeting was over.

A MATTER OF GIVING RIDES.

There are two stories this week, about young people getting rides with strangers in automobiles.

The first concerns Sgt. Shepard of the Police Department, and how he arrested a person who had stolen an automobile.

It happened a few weeks ago, when several youngsters stole a car from the parking lot at the Wilmington Plaza, and promptly ran into a snow bank, on Main Street. They were picked up quickly, by the Wilmington Police, except for one who proved to be elusive.

Sgt. Shepard was driving an unmarked cruiser. He happened to be at that point on Main Street where the "suspect" (to use police language) emerged from his dodging trip to escape the police. Very thoughtfully the Sergeant, who was in plain clothes, stopped and offered the youngster a ride.

"Where are you going, son?". "Lynn" - "Hmmm - that's just where I'm going"

Shepard explained he had to go through North Wilmington, and was then going down Route 93. Finally the police car had arrived at the point where it would turn into Adelaide Road, and only then did Shepard put the youngster under arrest, practically at the door of the police station.

Which proves that it doesn't pay to accept rides from strangers.

The second story concerns the editor-publisher of the Town Crier. He gave a ride to a couple of youngsters, last weekend, on Middlesex Avenue. They were going to Villanova Hall, and were let out of the car near St. Thomas' Church.

They both said, "Thank You, Dr. Fagan".

TO SING FRIDAY EVENING

THE SAINT PAUL'S BOYS CHOIR: Theodore Marier, Director is to sing in the Herbert C. Barrows Auditorium tomorrow evening, with the program starting at 8:15 pm.

1. Magnificat — Herbert Howells
   Kyrie, from 'Missa Sine Nomine' — G. P. da Palestrina
   Lamb of God, from 'Missa In Simplicitate' — Jean Langlais
   Shout for Joy, from Cantata No. 30 — J. S. Bach
2. Arabesque — Claude Debussy
   Peter Murean, Grade 7, Piano Soloist
3. He Shall Feed His Flock, from 'Messiah' — G. F. Handel
   Glory to God in the Highest — Jan Nieland
   Crucifixus, from 'Mass in B Minor' — J. S. Bach
   Hallelujah, from 'Messiah' — G. F. Handel

-Intermission-

4. Two Choruses from 'L'Allegro' — G. F. Handel
   Or Let the Merry Bells Ring Round
   These Delights If Thou Canst Give
5. Tu Mi Vuoi Tanto Bene (You love me so dearly) — Italian FolkSong
   The Nightingale — Thomas Weelkes
   Salut Printemps (Hail to Spring!) — Claude Debussy
6. Nola — Felix Arndt
   Thomas Colbert, Grade 8, Piano Soloist
7. Holiday Song — William Schuman
   Gute Nacht (Good Night, My Child) — German Folk Lullabye
   Two Choruses from 'Good Bye, Mr. Chips' — Leslie Bricusse
   Fill the World with Love
   School Days

UNITED METHODIST CHURCH

Rev. Willis P. Miller, Minister - 658-4519 or 658-8217.

Sun. March 26th: 9:30 and 11 am. Morning Worship and Church School; 3 pm. Open House - Wilmington Methodist Church; 6:30 pm. Youth Fellowship Groups; 7:30 pm. Bible Study and Membership Class.

Tues. March 28th: 7:30 pm. Pastor-Parish Relations Committee, also at 7:30. Ecumenical Affairs Committee.

ONE WAY TO SPEND THE TIME: During Town Meeting. Alice Papaliolios of 20 Harnden Street is a member of the Wilmington Conservation Commission; while she was busy on affairs of Town import her husband Costas did the family duty in the back of the Town Hall.

FRANCIS OTTATI: Of the Conservation Commission, projects pictures on a screen.

NEW MINUTEMEN CAPTAIN: Arthur Sugrue of 39 Marcus Road was elected Captain of the Wilmington Company of Minutemen, in a drumhead election, Sunday. He is shown receiving the Captain's Pistol from Private James F. Banda, who also happens to be a Selectman. At left is the company's guest, Dame Dorothy LaFionatis.

Officers in the background, L to R, include Stg. Dave Hill, Water Bearer William Meyer, Sgt. Norman Thatcher, Water Bearer Kenneth Robbins and Water Bearer Robert Butters.

1972
S. D. J. CARTER PROGRAM

ST. PAUL'S BOYS CHOIR

FRIDAY - 8:15 PM
MARCH 24, 1972

BARROWS AUDITORIUM
WILMINGTON HIGH SCHOOL

TOWN OF WILMINGTON

OFFICE OF THE TOWN CLERK

1972 Dog Licenses will go on sale Monday, March 27, 1972.

Esther L. Russell
Town Clerk

BOARD OF HEALTH CHILDREN'S CLINICS

On Tuesday, March 28, the Board of Health will sponsor a special clinic to be held at Villanova Hall from 9:30 - 10:30 am. This clinic will be ONLY for those children entering first grade in September who might need any of the following immunizations or booster doses:

Diphtheria, Tetanus, Whooping Cough, Oral Polio, Measles, Mumps, Rubella

On Tuesday, April 11, a small pox vaccination clinic will be held at Villanova Hall from 9:30 - 10:30 am for any child entering first grade who has never been vaccinated.

MAC & DUFF'S

RED TAG SALE

Now thru April 1

Attention: Spring Leagues

EQUIPMENT
COOPER
CCM
JOHNSON
WINNWELL
STALL-DEAN

SKATES
CCM-Tacks & many others
BAUER-Supremes, Panthers & more
HYDE-Figures

Goalie skates by CCM & BAUER
Jerseys - Hose - Pants (Men's & Boy's)
Most Sticks

Youth Hockey jackets still available in larger sizes

Team orders being taken now for Fall Season

52 Main St. 658 - 9876
(Around the corner from Silver Lake Pharmacy)

CORINTHIAN POOLS
A PRODUCT OF CORINTHIAN POOL CORPORATION
SALES·SERVICE·CHEMICALS
ACCESSORIES
ALUMINUM IN-GROUND SWIMMING POOLS - VINYL LINER (SAF-T-PLA) NO PAINTING-NO PEELING WITH CORINTHIAN VINYL LINED ALUMINUM POOL-BUILT TO LAST A LIFETIME
ALL SIZES and SHAPES
Barden HOME IMPROVEMENT Company
CALL
658 - 3646
658 - 3376

A Jackson Home

is a Quality Home!

6 5 8 9 0 7 1

CUSTOM HOMES - GARRISONS
EMBANKMENTS - RANCHES - CAPES
BREEZEWAYS - GARAGES, ETC.

JACKSON BROS. INC.

CARD MARINE, INC.
1972 Model Boats, Motors and Accessories
Complete Ship's Store
Swaging, Rigging and Outfitting Service
Store Hours: Tues - Sat. 9:00 AM- 2:00 PM
Closed Sunday and Monday
50 HIGH STREET - WOBURN, MASS
935-2120 Days 245-6115 Nights

Blazers win ten in a Row

The Blazers extended their recent unbeaten streak to ten with an exciting 1-0 triumph over the Rockets last Saturday in Sprite action at the Arena.

In other contests the Bears belted the Barons, 6-0 and the Blades battled the Checkers to a 1-1 tie.

SQUIRT DIVISION LEADING BLAZERS: Kneeling, L to R: J Morgan, B Borgeson, D Storer, E Moran, M Laliberte, M. Ciaccio, D Wibert and R Warren
Center Row, L to R: R Dodge, D Bachman, S O'Donoghue, M Moran, R Bent, A Randall, and J Stouffer
Rear, L to R: L O'Donoghue, R Laliberte (Coach) and R Stouffer, (Equipment Manager)
The guest in the upper left hand corner is Stan Larson, simply looking things over

In the Bantam section, the Bruins increased their first place lead to three points with a 5-3 win over the Rangers, while the Red Wings topped the Canadiens, 5-2. The North Stars moved back into the top spot in the Pee Wee Division edging the Seals, 5-4 while the Blues were idle. In the other game the Kings outscored the winless Flyers, 6-4.

Sunday morning in the Squirt loop, the Aces and Americans battled to a 2-2 tie, while the Clippers were defeating the Braves, 3-1 and the Reds topped the Vovageurs, 4-2. Last Saturday morning the divisional leading Bears whitewashed the Barons, 6-0 to keep their slim two point lead over the Aces.

NEXT GAMES AT YOUTH ARENA

Tonight: Braves vs Vovageurs (6 pm); Reds vs Americans (6:40 pm); Aces vs Bears (7:20 pm); Blues vs Seals (9 pm); Flyers vs Penquins (10 pm).

Saturday: Bruins vs Red Wings (9 am); Canadiens vs Rangers (10 am).

Sunday: Rockets vs Blades (5 am); Checkers vs Blazers (5:40 am) Barons vs Clippers (6:20 am).

Thurs. March 23rd: Last day of the weekly clinics.

HEART . . . fashioned in brilliant Austrian crystals . . . set in 14Kt. white gold overlay mountings.
See our fine selection of distinctive jewelry

by Kiementz

BOUVIER'S WATCH REPAIR
354 Middlesex Ave
Wilmington
3 PM - 10 PM
- Unusual Time -
UNUSUAL GIFTS

Going to Boston?
AVOID TRAFFIC JAMS, PARKING PROBLEMS

Take the train
AND ARRIVE RELAXED Clip this schedule for ready reference

MONDAY – FRIDAY ONLY

Leaving Wilmington	Arriving Boston	Leaving Boston	Arriving Wilmington
6:00 A.M.	6:25 A.M.	7:10 A.M.	7:32 A.M.
6:40	7:05	8:05	8:29
7:20	7:48	9:15	9:39
7:55	8:18	10:30	10:54
8:55	9:18	12:10 P.M.	12:34 P.M.
9:35	10:00	2:10	2:34
10:35	11:00	3:10	3:34
11:35	12:00	4:15	4:37
12:55 P.M.	1:20 P.M.	5:03	5:25
2:55	3:20	5:25	5:47
4:15	4:40	6:05	6:30
5:11	5:33	6:50	7:15
6:05	6:30	7:50	8:14
7:10	7:36	9:30	9:54
9:00	9:25	10:20	10:44
10:40	11:05	12:10 A.M.	12:34 A.M.

SATURDAYS ONLY

7:15 A.M.	7:40 A.M.	8:00 A.M.	8:24 A.M.
8:15	8:40	9:45	10:09
9:15	9:40	11:40	12:04 P.M.
10:45	11:10	1:20 P.M.	1:44
12:45 P.M.	1:10 P.M.	3:20	3:44
2:45	3:10	4:20	4:44
4:45	5:10	5:20	5:41
5:45	6:10	6:20	6:44
7:45	8:10	8:20	8:44
9:20	9:45	10:00	10:24
11:35	11:59 A.M.	12:10 A.M.	12:34 A.M.

SUNDAYS AND HOLIDAYS ONLY

8:40 A.M.	9:05 A.M.	9:10 A.M.	9:34 A.M.
10:10	10:35	12:10 P.M.	12:34 P.M.
1 10 P.M.	1:35 P.M.	3:10	3:34
4:10	4:35	5:30	5:54
6:30	6:55	8:00	8:24
9:05	9:30	10:00	10:24
11:05	11:30	12:10 A.M.	12:34 A.M.

BOSTON & MAINE

HOME OWNERS CORNER

By Roger

Listen! Go to every room in your house in turn and listen! Do you hear squeaks? Squeaks indicate that something needs attention. For doors and other mechanisms with moving parts, oil is the primary need. Oil at all friction points will often silence that small cry for help!

In furniture, however, squeaks usually mean loose parts. The only help here is to take the furniture apart and reglue it.

Silence your house: somehow you will feel better.

Before you do home repairs listen to the advice of the experts at **Sweezey Home Courtesy Center**, 615 Main St., 658-2051. Stop in and see our large unfinished furniture display including hardwoods plus all the supplies you need to finish the items. Bank Americard and Master Charges are honored. Free delivery abailable.

Charge with Bank Americard or Master Charge.

Helpful Hint: Cracks in wooden bowls can be filled with shellac.

No Check Hockey

Playoffs begin Tonight

Monday night a pair of league encounters closed the second half of the WAHL with the Aces coming out on top. Tonight at the Arena begins the best 2 of 3 playoffs pitting the Blues (1st half winners) against the Aces, while in the other set the Jets will tangle with the Flyers.

In the final two league games, the Jets came from behind to upend the Aces, 6-4 and the Blues outscored the Flyers, 7-4.

Paul Currie, Bruce MacInnis (2) and Jim Cushing lit the scoring lamp in the final period for the Aces to provide the margin of victory after the Aces had taken a 3-2 lead into the final frame. MacInnis and Ed Buckley of the Aces each registered hat tricks.

The Blues broke open a close contest, 4-3 Blues led entering the third period, scoring three times in the last period. Pete Pellerin led Jim Newhouse's sextet scoring three times, including the game winner.

A week ago tonight at the Arena the Jets belted the Flyers, 7-1 scoring five times in the middle frame. And in the nite cap, the Blues battled the Aces even (2-2) for two periods before exploding for three markers in the last stanza to win, 5-2.

No-Check Hockey Schedule

PLAYOFF SCHEDULE

Tonight: Blues vs Aces (11:20 pm); Jets vs Flyers (12:30 am).

Monday: Jets vs Flyers (10:40 pm); Blues vs Aces (11:50 pm).

RICHARD JUSTICE: Of Brand Avenue performs on his bike last week while home on leave from the Army. Richard, who is a 1970 graduate of Wilmington High School, hold the rank of Expert in Scrambles and Moto Cross Competition and finished third in the 1970 New England Scrambles and Moto Cross Championship. He left recently for Fort Jackson, South Carolina where he will undergo Airborne Infantry training

V. F. W. POST 2458
Post Meeting - March 23 **DUES ARE DUE**
Nomination April 13
Nomination & Election - April 27
40th Anniversary Banquet - April 29
Game Night: Monday at 8 p.m.
Drums Night: Tuesdays at 8 p.m.
Main Street, Wilmington Center

SELF DEFENSE COURSE OFFERED BY REC. DEPT.

The Recreation Department is planning to conduct a six week course in self-defense, one evening a week for adults this Spring.

The ladies class will run from 7 to 8:30 and the men's class will be conducted from 8:30 to 10. Evening yet to be determined.

Anyone interested in signing up for this free course of instruction, by David Webster (green belt) is invited to contact Ron Swasey at the Recreation Office, 658-6512.

TOWN PARK PERMITS

The Recreation Department has requested that all organizations and groups wishing to reserve time at the Town Park this Spring and Summer please do so in writing by March 31st.

The scheduling will be done in a manner that will allow optimum usage for the townspeople of Wilmington.

If there are any questions please refer them to Ron Swasey at the Recreation Office, 658-6512.

DOG OBEDIENCE SCHOOL BEGINS MARCH 27TH

The Dog Obedience School to be conducted by the Beverly Regional YMCA, in conjunction with the North Suburban YMCA in Woburn will begin Spring classes on Monday, March 27th from 7:30 to 8:30 pm.

Instructor of the class will be Tom Flynn, owner of the Canine Country Club in Burlington who has been a trainer for 30 years.

Classes will be held at the Beverly Regional YMCA; for more information, call 922-0990.

STEVEN CUNNINGHAM ENLISTS IN NAVY

Steven A. Cunningham, son of Mrs. Lillian Cunningham, 27 Richmond Street, recently enlisted in the US Navy and is undergoing recruit training at the Naval Training Center, Great Lakes, Illinois.

Upon completion of his training, Steven will be given leave and then report to one of the Navy's class "A" schools, or receive on-the-job training in one of the Navy's sixty major job fields.

ELIZABETH POWER TO VISIT IPSWICH RIVER AUDUBON CLUB

On Monday evening, April 3rd at 7:45, Mrs. Elizabeth L. Powers, outstanding bird and nature photographer, will be presenting a program - Birding in the Southern States, at the Ipswich River Audubon Club meeting in the Barn of the Audubon Wildlife Sanctuary, Topsfield.

This is a club to which you do not have to belong, simply come along and enjoy yourself, refreshments and all. This is a wonderful opportunity to view beautiful pictures taken in the south by an expert.

There will be a charge of 50¢.

Another bonus for April is the Saturday morning Bird Walks for beginners, lead by Maria Pacheco at the Topsfield Audubon Sanctuary. These take place each Saturday, beginning at 9 am at the Barn.

Help put a thief out of business by joining

"OPERATION IDENTIFICATION"

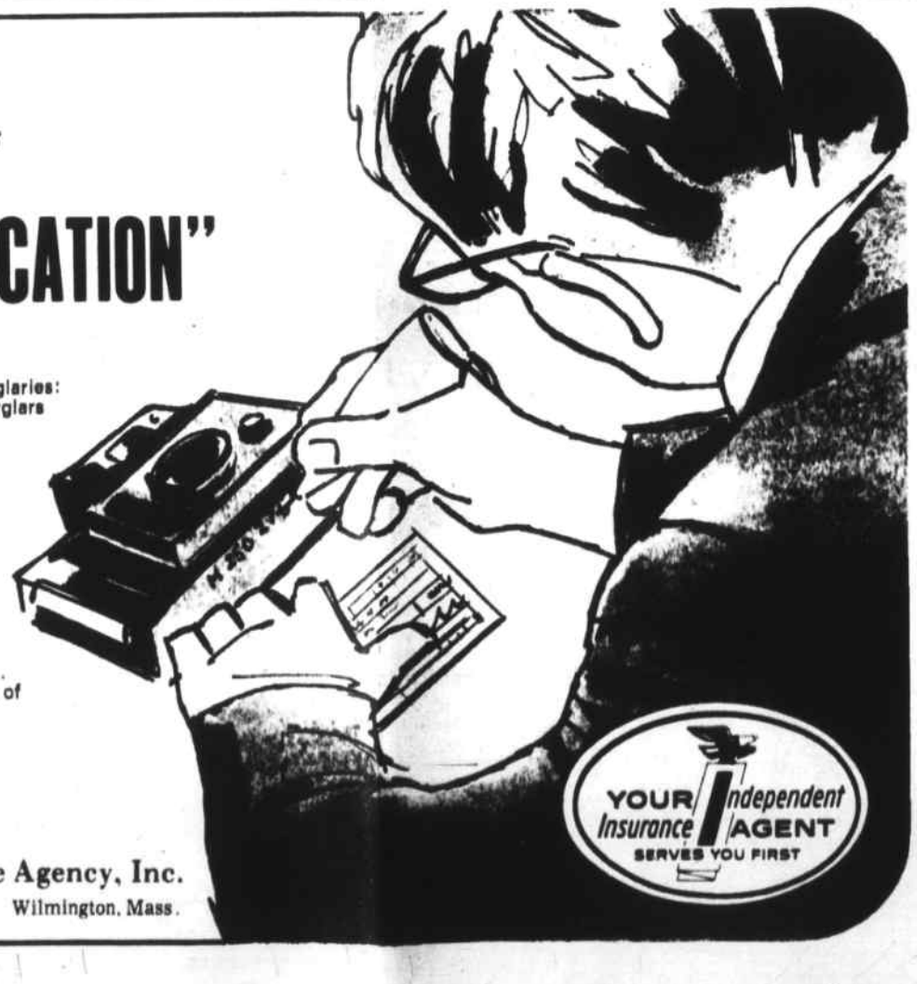

Here's how "Operation Identification" works to reduce home burglaries:
• Inscribe your driver's license number on your valuables that burglars find most tempting — TV sets, radios, cameras, tape recorders, stereos, etc. • Then put a special "Operation Identification" sticker on the door or window of your home advising would-be thieves your possessions of value have been marked for ready identification by law enforcement agencies.

IF YOU'RE INTERESTED IN PUTTING A THIEF OUT OF BUSINESS . . . Put it in writing with the Personalized Protection offered through "OPERATION ID". You can borrow a special electric pencil and receive your official "OPERATION ID" window sticker — no cost or obligation . . . just visit our agency at the sign of the Big "I" symbol.

operation identification

YOUR Independent Insurance AGENT SERVES YOU FIRST

Bedell Brothers Insurance Agency, Inc.
402 Main St. 658-9116 Wilmington, Mass.

Enter The Contest Where EVERYONE WINS A Grand Gift

See Page 9

STOP GO

STOP & GO SANDWICH SHOPPE
North Wilmington Center
658-9432
Sandwich Shoppe
Jack and Mary Holloway

CARD OF THANKS

To all those who worked and supported me during and after the campaign, my sincerest thanks. Mike and Dan, good luck.

Frank Sferrazza

CARD OF THANKS

To my opponents-congratulations: it was a fair fight. Many thanks to those who supported me.

George Hooper

Town Crier Wilmington

Published every Thursday by the Wilmington News Company Inc., 364 Middlesex Avenue, Wilmington, Mass., 01887. Tel. (617) 658-5246.

Subscription prices, payable in advance, Wilmington $5, U.S. $6, Foreign $7. All subscriptions expire on December 31. The Town Crier of Wilmington does not send out renewal notices. Subscribers are expected to pay in January of each year for renewal.

Office hours Monday thru Wednesday, 9 AM to 5 PM. Thursday and Friday as convenient.

Advertisements and stories for the Town Crier of Wilmington should be submitted no later than Tuesday noon in the week of publication.

Pictures for publication. No charge is made if they are suitable, and are a part of a story which is accepted for publication. To be suitable they must be black and white photos of the size needed. For a picture of an individual, a wallet size black and white photo is best. For color pictures or for pictures which must be changed in size, there will be a charge of $4.

No financial responsibility is accepted by The Wilmington News Co. for errors in advertisements. A reprint will be made of any part of an advertisement in which an error affects the value of an advertised item.

The Town Crier of Wilmington has been honored by ten awards in journalism.

Second Class Postage paid at Wilmington Mass., 01887 Post Office.

Member of:
MASSACHUSETTS PRESS ASSOCIATION
NEW ENGLAND PRESS ASSOCIATION
NATIONAL NEWSPAPER ASSOCIATION
(Sustaining Member)

EAST GATE LIQUORS

NEXT TO LUCCI'S

Meet The Black Velvet Girl Friday. From 4:00 to 8:00 PM.

Black Velvet Canadian Whiskey ½ Gals. Will Be Featured.

Stock Up Early For The Holiday

COME SEE WHY EVERYONE IS SHOPPING AT EAST GATE

THE SUPER MARKET LIQUOR STORE

QUALITY, SERVICE

BUDGET PRICES . . .

AND NOW

THIS . . . .

RIGHT ON!

THE GAME

MASSACHUSETTS STATE LOTTERY

TICKETS

WED., MARCH 22

LUCCI'S SUPERMARKET, Inc.

ROUTE 129 • WILMINGTON

211 LOWELL STREET - AT WOBURN STREET

We reserve the right to limit quantities on all items. Nor responsible for typographical errors.

U.S. GOV'T AUTHORIZED ★ FOOD STAMP ★ SUPERMARKET

US CHOICE BONELESS **CHUCK ROAST** 89¢ LB.

EXTRA LEAN CENTER CUT **PORK CHOPS** 89¢ LB.

NEPCO **BACON** 79¢ LB.

U.S. CHOICE BONELESS **UNDERCUT ROASTS** 99¢ LB.

LEAN BONELESS **PORK TENDERLOINS** 99¢ LB.

NEPCO 'CRY-O-VAC' **CORNED BEEF** $1.09 LB.

LEAN **BONELESS CHUCK STEAKS** $1.09 LB.

LEAN COUNTRY STYLE **SPARERIBS** 69¢ LB.

COLONIAL **SMOKED SHOULDERS** 59¢ LB.

WHOLE **PORK LOINS** (CUT AS DESIRED) 79¢ LB.

COLONIAL *EXTRA MILD* **FRANKS** 69¢ LB.

U.S. CHOICE **BLADE OR CUBE STEAKS** $1.39 LB.

GRADE "A" NORBEST **TURKEYS** 10 TO 12 LBS "With the Built in Timer" 49¢ LB.

HEAT & SERVE MEALS

STUFFED CLAMS 69¢ PKG OF 3

LEAN TENDER STEW BEEF 99¢ LB.

For Your Lenten Meals

OCEAN FRESH **HADDOCK FILLETS** $1.39 LB.

FANCY **JUMBO SHRIMP** $3.29 LB.

CODFISH CAKES 89¢ LB.

CLAM CAKES 89¢ LB.

FROM THE DELI !

FRESH GROUND **CHUCK HAMBURG** 4/$3.56 LB. BUCKET (99¢ Single Lb.)

GENOA SALAMI $1.79 LB

DIET LEAN **GROUND ROUND** $1.09 LB.

U.S. CHOICE **SKIRT STEAKS** $1.29 LB.

ALASKAN "KING" CRAB LEGS $1.79 LB.

FANCY NO. 1 **SMELTS** 59¢ LB.

WEAVER'S CHICKEN ROLL $1.29 LB.

THE FRESHEST AND FINEST PRODUCE.....ANYWHERE!

BANANAS 12¢ LB. SAVE 5¢ LB

CORTLAND APPLES 3 LB 39¢ BAG GREAT! FOR BAKING & EATING

IT'S SALAD WEEK!

CELERY 29¢ BCH SAVE 20¢

CHICORY or ESCAROLE 19¢ LB. SAVE 20¢ LB

BEEF STEAK TOMATOES 29¢ LB. LG. PLUMP & JUICY SAVE 20¢ LB.

BOSCUL TEA BAGS 79¢ SAVE 30¢

HILLS BROS. COFFEE

COUPON & $5 PURCHASE

3 LBS. $1.99 SAVE 70¢

GOOD ONLY AT LUCCI'S LIMIT: ONE PER PERSON EXPIRES MARCH 24, 1972

BETTY CROCKER CAKE MIX

COUPON

Buy Three Get One FREE

SAVE 41¢

KING SIZE AJAX $1.09 84 Oz SAVE 46¢

COUPON & $5 PURCHASE

GOOD ONLY AT LUCCI'S LIMIT: ONE PER PERSON EXPIRES MARCH 24, 1972

MAXWELL HOUSE INSTANT COFFEE

99¢ 10 OZ SAVE 64¢

HOOD'S ICE CREAM RITE FORM ½ GAL 59¢ SAVE 26¢

FRESH FROZEN **MORTON'S DINNERS** SALISBURY CHICKEN TURKEY 3/$1 SAVE 47¢

FRESH FROZEN **MORTON CREME PIES** 14 OZ 6/$1 SAVE 78¢

DURKEE STUFFED OLIVES 5¾ OZ 3/$1 SAVE 41¢

RITTERS CATSUP 20 OZ 4/$1 SAVE 25¢

IMPERIAL BLENDED OIL GAL. $1.69 SAVE 40¢

BENNETTS MAYONAISE QT 49¢ SAVE 16¢

LINCOLN JUICE **GRAPE ORANGE** ½ GAL 2/85¢ SAVE 21¢

ARDMONA PEARS 2½ CANS 3/$1 SAVE 18¢

RITTERS TOMATO JUICE 32 OZ 4/$1 SAVE 48¢

SNOWS CLAM CHOWDER 15 OZ 4/95¢ SAVE 25¢

STYRO FOAM CUPS 7 OZ 3/$1 SAVE 47¢

FIRESIDE CREMES CHOC & VAN 29¢ SAVE 12¢

CHEEZ -ITS 10 OZ 3/95¢

KLEENEX ASS'TD COLORS 6/$1 SAVE 47¢

PUREX BLEACH 3 GAL 3/$1 SAVE 53¢

SWEETHEART DISH DETERGENT 5/$1 SAVE 75¢

New books at Memorial Library

"Yellowhouse; a Novel of the Cavalry in the West" by Dee Brown: The use of a post-Civil War man-carrying weather balloon helps subdue a Sioux attack on Fort Yellowhorse. By the author of "Bury My Heart at Wounded Knee".

"My Land is Dying" by Harry M. Caudill: An urgent appeal tp prevent the further devastation of this entire country. The author "pleads" for a change in our economic proprities as the first ounce of prevention to effect the necessary pound of cure. Illustrated photographs show much of the irretrievable damage already beyond belief.

"How to Live With Diabetes" by Henry Dolger: A revised edition dealing primarily with the diabetic person more than the disease itself.

"Cities Fit to Live In; and How We Can Make Them Happen" by Walter McQuade: "new designs for an urban renaissance" in 17 articles, with illustrations and diagrams, dealing with the past problems and present solutions.

"Code Five" by Frank G. Slaughter: Meaning "cardiac arrest" is applied to both some of the patients and the run-down city hospital they are taken to, and the struggle to save each by Dr. Jud Tyler.

Children's Books

"The American Boy's Handy Book" by D.C. Beard: A best-seller in 1882, this newly reprinted volume of hobbies and games for boys includes directions for making a snow fort, an ice-boat, a magic lantern, a water telescope and home-made fishing tackle among other old but new ideas.

"Who Really Killed Cock Robin" by Jean Craighead George: A mystery story with an ecological back-ground, sluething mixed with painless conservation education.

"The Enchanted Castle" by E. Nesbit: One of England's finest writers for children, has charmed several generations of youngsters with her imaginative stories. This one is a treasure.

"Toto and the Aardvark" by Freda Linde: An award winning South African story, translted from Afrikans, about a gentle boy and a gentle beast.

"The Black Caldron" by Lloyd Alexander: The second in a series of five books comprising a fantasy cycle set in the imaginary land of Prydain. Based on a study of Welsh language and lore.

ALL ROADS LEAD TO CERRETANI'S MONEY SAVING CENTER • • ALL ROADS LEAD TO CERRETANI'S MONEY SAVING CENTER • • ALL ROADS LEAD TO CERRETANI'S MONEY SAVING CENTER

THE SAVINGS ARE ON US DURING OUR GRAND OPENING SALE

Largest Independent Retailer of Better Quality Meats East of the Mississippi — We issue Rain Checks on all sold out items!

OF OUR NEW MARKET IN READING SQUARE NEXT TO McDONALD'S AND OUR BRAND NEWLY ENLARGED . .
REMODELED MARKET IN MELROSE SQUARE NEXT TO CITY HALL Save $500 A Year At Cerretani's Markets

You are cordially invited to inspect our new Meat Coolers and Cutting Rooms for Better Quality Meats and Sanitary Conditions. Each piece of equipment is sterilized daily to insure cleanliness. All our Meat Departments are conducted for Sanitary Conditions as are Hospital Operating Rooms . . . Cleanliness is our Policy.

Rath Golden Harvest Iowa Corn Fed Extra Lean, Center Cut — Save 35c lb.

PORK CHOPS 74c lb.

Iowa Corn Fed X-Lean — Loin Quarter PORK CHOPS	Save 30c	lb. 69c
Iowa Corn Fed Extra Lean — PORK CUTLETS	Save 35c	lb. 84c
Iowa Corn Fed Country Style — Rib Loin SPARE RIBS	Save 21c	lb. 58c
Iowa Corn Fed Lean, Meaty — 5-RIB PORK LOIN	Save 21c	lb. 48c
Iowa Corn Fed Extra Lean — WHOLE PORK LOIN	Cut in Chops 74c lb.	lb. 68c
Iowa Corn Fed X-Lean — RIB HALF PORK LOIN	Cut in Chops 69c lb.	lb. 64c
Iowa Corn Fed X-Lean — CHINE HALF PORK LOIN	Cut in Chops 74c lb.	lb. 68c
Ideal for Meat Cakes — Sausage Meat — GROUND PORK		lb. 68c

ITALIAN TREATS

Sweet or Hot SAUSAGES	lb. 88c
Twin Pak Cello PEPPERONI	lb. $1.49
Whole Midget Hot CAPPICOLA	lb. $1.59

COLONIAL SALE

Sliced Bacon	lb. 79c
All Beef Franks	lb. 69c
Cryovac Chunk BOLOGNA	lb. 75c
Cryovac Chunk LIVERWURST	lb. 69c
Garlic, German Sliced BOLOGNA	lb. 79c
All Meat — All Beef — Sliced Sliced Bologna	lb. 79c
All Meat—1½ lb. bag FRANKFORTS	lb. $1.19
Master—water added PICNICS	lb. 69c

These prices effective thru March 25—We reserve the right to limit quantities—Not responsible for typographical errors.

Shop our Super Deluxe Produce Department for Best Quality -- Variety and Price -- All Fruits and Vegetables are displayed in refrigerated display cases to insure Quality and Freshness at all times -- Never will we take a back seat . . . We are Number 1.

COLUMBIA SALE

Child Mild FRANKS	lb. 79c
All Meat Sliced BOLOGNA 1 lb. pak	79c
POLISH RINGS	lb. 89c
Deutchmeister Reg. FRANKFORTS	lb. 98c
POLISH VEAL	lb. 79c

RATH SALE

6 oz. pak BOLOGNA	39c
6 oz. pak PICKLE LOAF	39c
Pure Beef WEINERS	lb. pak 79c
Barbecue 3 lb. Canned Ham	3.98
Rothmund German KNOCKWURST	lb. 89c
Morrell's All Meat FRANKS	lb. 69c

USDA Top Choice Heavy Iowa Corn Fed Steer—Cut from Chuck — Save 41c lb.

London BROIL $1.08 lb.

We Sell the Best Meats In Town No. 1 By Far

Top Choice Steer—Beef Chuck SHOULDER ROAST	Save 31c	lb. $1.18
Top Choice Steer for Braising CHUCK STEAK, bone in	Save 24c	lb. 64c
Top Choice Steer — Boneless UNDERCUT STEAK	Save 24c	lb. 84c
Top Choice Steer — Boneless CHUCK FILLET	Save 24c	lb. 88c
Top Choice Steer, Iowa Beef Chuck—Bone-in UNDERCUT STEAK	Save 24c	lb. 74c
Top Choice Steer, Iowa Corn Fed Chuck STEWING BEEF 2 lb. Family Pak	Save 14c	lb. 84c
Top Choice Heavy Iowa Corn Fed Steer TOP ROUND STEAK	Save 37c	lb. $1.38
Top Choice Heavy Iowa Steer Beef Round SIRLOIN TIP STEAK	Save 37c	lb. $1.38

Jumbo Size Garden Fresh
ICEBERG LETTUCE
BUY 1 AND GET 1 HEAD FREE
29c head
SAVE 29c

CALIFORNIA SUNKIST ZIPPER PEELING
NAVEL ORANGES 4 lb. bag 79c
DISCOUNT 20c

Jumbo Size Indian River, Thin-Skinned WHITE GRAPEFRUIT	Disc. 60c	8 for $1
U. S. No. 1, Controlled Atmosphere McIntosh Apples	Disc. 30c	3 lb. bag 29c
Cerretani — The Banana King BANANAS	Discount 8c	10c lb.
Vine-Matured Solid Red, Ripe, 12 oz. cello pkg. TOMATOES	Disc. 20c	2 pkgs. 49c
Large bunch, Pascal, Crunchy, Crisp CELERY	Disc. 12c	bunch 27c

• BEST DELI DEPARTMENT IN TOWN •

Serve it hot or cold with kosher pickles SLICED PASTRAMI	lb. 98c
Out of this world texture and flavor German Bologna	lb. 79c
Best cure that money can buy Genoa Salami	½ lb. 79c
Made and cured with good Italian flavor — Midget Quincy Salami	lb. $1.59
Bone-in—Stock up for Easter Whole Proscuitto	lb. $1.59
All lean with that old Italian gusto HAMICOLA	½ lb. 89c
Ham you will be proud to eat and serve Pepper Ham	½ lb. 98c
Just like the old time taste Sweet Cappicola	½ lb. 89c
Imported style—Flavor that can't be beat Mortadella	½ lb. 75c

Top Choice Iowa Corn Fed Steer, Bottom Round Boneless — Save 31c

We sell the best meats in town . . . No. 1 by far!

ROASTS $1.08 lb.

• CHOPPED BEEF SALE •

For meatloaf, approx. 3 lb. pak GROUND BEEF	Save 42c	lb. 75c
For cheeseburgers, 3 lb. pak LEAN BEEF	Save 42c	lb. 85c
For weight watchers, 3 lb. pak EXTRA LEAN BEEF	Save 42c	lb. 95c
Ten in a 2-lb. box BEEF PATTIES	Save 28c	lb. 75c
Top Choice Steer—Boneless CHUCK Oven Roast	Save 21c	lb. 88c
Top Choice Steer Iowa Corn Fed TOP ROUND STEAK ROAST	Save 31c	lb. $1.28
Top Choice Steer Beef Round SIRLOIN STEAK ROAST	Save 31c	lb. $1.28
Top Choice Steer Beef Round BACK RUMP STEAK ROAST	Save 31c	lb. $1.28
Top Choice Steer Steak Roast EYE ROUND	Save 31c	lb. $1.48
Top Choice Steer, Super Deluxe Round, HONEYMOON STEAK ROAST	Save 31c	lb. $1.58

it's Cerretani's SUPER MARKET

ALL ROADS LEAD TO CERRETANI'S MONEY SAVING CENTER • • ALL ROADS LEAD TO CERRETANI'S MONEY SAVING CENTER • • ALL ROADS LEAD TO CERRETANI'S MONEY SAVING CENTER

ALL ROADS LEAD TO CERRETANI'S MONEY SAVING CENTER • ALL ROADS LEAD TO CERRETANI'S MONEY SAVING CENTER • ALL ROADS LEAD TO CERRETANI'S MONEY SAVING CENTER

Cerretani's Fabulous Grocery Dept. features over 7000 Top Quality Grocery Items AT BIG SAVINGS TO YOU

SMASHING!

Cerretani's Grocery Dept. is the best regimented and conducted in the U.S.A. The Grocery Dept. was and is the first to hire retired men for part time work at the check-out stands which gives the best and fastest check-out service in the business and the Grocery Dept. is the very first to hire the handicapped and we are more than happy of this fact. Our aim is to please everyone. We enjoy nothing more than to see retired people with that everlasting smile greeting the public at all of our markets. These are our customers, too.

CHECK

the quality when you check the price!

Fresh Deep Sea
COD FILLET
lb. 98c

it's Cerretani's SUPER MARKET

YOU SAVE 35c — Montini Italian Style — **Peeled Tomatoes** 3 35 oz. cans — WHY PAY MORE $1.00

YOU SAVE 32c — Penn Dutch Stems & Pieces—Serve with steak — **MUSHROOMS** 4 4 oz. cans — Why Pay More $1.00

YOU SAVE 19c — Prince Spaghetti or—Wednesday is Prince Spaghetti Day — **SPAGHETTINI** 5 1 lb. pkgs. — Why Pay More 94c

YOU SAVE 17c — Double Fudge — Oatmeal — Iced Raisin Bar and — **KEEBLER FIG BARS** 3 pkgs. — Why Pay More $1.00

YOU SAVE 64c — Your Choice—Mix or Match—Nissen's Mrs. Carter's or — **Pumpernickel Bread** 4 1 lb. lvs. — Why Pay More $1.00

YOU SAVE 10c — Gelatin — **JELLO DESSERTS** 10 3 oz. pkgs. — Why Pay More $1.00

YOU SAVE 53c — For Whiter Clothes—Lessen Your Laundry Chores With — **PUREX BLEACH** 3 1 gal. — Why Pay More $1.00

YOU SAVE 20c — It's Cott's to be good—Ginger Ale, Root Beer, Orange, Cola — **COTT'S TONIC** 6-pak 69c — Why Pay More

YOU SAVE 17c — Mrs. Filbert's—It spreads like the expensive spread — **OLEOMARGARINE** 3 1 lb. pkgs. — Why Pay More 88c

YOU SAVE 45c — Breakstone—Don't miss the boat, try it, buy it — **SWISS PARFAIT** 5 8 oz. pkgs. — Why Pay More $1.00

SAVE 12c — EXCELLENT FOR BAKING - FRYING OR SALADS — **WESSON OIL** 49c 24 OUNCE BOTTLE

SAVE 14c — FOR A CHANGE OF PACE FROM POTATOES SERVE — **MINUTE RICE** 69c 28 OUNCE PKG.

SAVE 24c — MILD LIQUID — **IVORY DETERGENT** 53c QUART BOTTLE

Three Locations to serve you better quality foods at Sensible, Livable Prices. We offer you better service and cleaner, brighter markets.

Prices effective thru March 25

SUMMER SPECIALS ON FROZEN FOODS

BOSTON BONNIE — SAVE 32c — **FISH DINNER** 8½ oz. pkg. 3 pkgs. $1.00

MORTON'S — SAVE 32c — **CREAM PIES** 4 14 oz. pkgs. $1.00

SOMERDALE — SAVE 13c — **VEGETABLES** 5 8 oz. pkgs. $1.00

Weight Watcher's Special — SAVE 20c — **HOOD'S RITE FORM** HALF GALLON 65c

BANQUET — SAVE 30c — **SALISBURY STEAK** 2 lb. pkg. 99c

BANQUET — SAVE 30c — **VEAL PARMIGIANA** 2 lb. pkg. 99c

CLIP THIS COUPON — CERRETANI'S COUPON — SAVE 47c—SCOTT — **SCOTT TOWELS** 3 pkgs. 2 rolls $1.00 — Limit 1 per family—Expires 3-25-72

CLIP THIS COUPON — CERRETANI'S COUPON — SAVE 20c—PLANTER'S SMOOTH CREAMY — **PEANUT BUTTER** 28 oz. jar 69c — Limit 1 per family—Expires 3-25-72

CLIP THIS COUPON — CERRETANI'S COUPON — SAVE 14c—HUNT'S — **TOMATO SAUCE** 3 15 oz. cans 49c — Limit 1 per family—Expires 3-25-72

CLIP THIS COUPON — CERRETANI'S COUPON — SAVE 22c—HUNT'S — **TOMATO PASTE** 3 6 oz. cans 29c — Limit 1 per family—Expires 3-25-72

CLIP THIS COUPON — CERRETANI'S COUPON — SAVE 50c—Reg. or Elec. Perk — **HILLS BROS. COFFEE** 3 lb. can $2.19 — Limit 1 per family—Expires 3-25-72

ALL ROADS LEAD TO CERRETANI'S MONEY SAVING CENTER • ALL ROADS LEAD TO CERRETANI'S MONEY SAVING CENTER • ALL ROADS LEAD TO CERRETANI'S MONEY SAVING CENTER

A 'SWEEZER' could mean a crowd pleaser. How about this 'SWEEZER'?

For the balance of the month of 'March' 'FREE' plastic Inside or Outside corners with all paneling orders.

Sweezey Home Courtesy Center

615 Main St. (Rt. 38)
Wilmington
658-2051

Nosey Nancy

Send your announcements to Nancy Box 208, Wilmington or call 657-7141, and after five, 658-4865. If I'm not there, I'll call you.

So - Hi to you all - and She wonders if the gremlins will be as busy in the column this week, or if you are going to be able to read this one - St. Pat's Day is past so mebbe - just mebbe - that is - they are under control? And that Irish Cawfee was delish - Yum Yum!

So ya know what happened? Had the strolling minstrels, the corned beef 'n cabbage - the whole bit at that IRS for lunch - and ya know this Gal - well - since the School Com. Seance let out close to 2 - and she was still asleep on the ride to Andover - eemagine her surprise - when she discovered she had chosen to gown herself in an **Orange dress** - well, let her tell ya - she survived - but it warn't easy!

Did ja know Nora Donato is the first with the diapers at 8 Cedarcrest - Thanks Nora!

And hear that Gerry Stevens of Chestnut St. and Bruce Bishop of Marion St. worked up that prize exhibit for the Flower Show at the Armory in Boston this week. They designed it with the help of Reggie Bishop and they work at the Kartuz Greenhouses - Congrats on that hobbycraft there, fellas!

March 25th see that Legislative Dinner Dance at the K of C Hall and roast beef is the menu. Call Betty Spahl for the tickets, 658-9207 - and hear the reps and senators will be present!

Also same night at the VFW in Tewksbury is the Sons of Italy 5th Anniversary celebration. Call Bob Dicey or Rico Catalano for that one.

Did you notice the fine job that Frosh Selectman Mike Caira did at the Town Meeting - Nice going Mike!

Folks, free to Wilmington residents, as usual, the S.D.J. Carter Lecture Program is the St. Paul's Boy's Choir, tomorrow night, that's Friday, March 24th at the High School Auditorium. And it is time to license all dogs, tags are ready at the Town Clerk's office. Then on next Tuesday, March 28th there will be a bunch of clinics for children entering first grade, starting at 9:30 am at Villanova Hall - these are all shots and booster shots except small pox vaccination which will be held on Tuesday, April 11th, same time and place, and only for kids entering school next Fall. It's a shame, but the Boy Scout Troop 59 is not meeting at St. Dorothy's Hall on Friday evenings until further notice. And next week, save out April 7th and 8th for the three one-act plays being presented by the Spotlighters at Barrow's Auditorium - Sounds good!

I see where our own Ken Wilson of Andover Street will present an Easter music concert on Sunday, April 2nd at the Hammond Castle in Gloucester, at 4 pm - Tickets for this may be obtained by calling 283-2080. And our own Dr. Gerald S. Davis and his missus just returned from a convention, actually the 50th Annual Congress of the New England Council of Optomotrists, held in the Sheraton Boston Hotel.

And did you hear that the drama society of Austin Prep, the Blackfriars, captured all kinds of honors this month, in competition with other Catholic High Schools? They were in the finals and five actors were selected as All-Stars. Then in the Mass. State H.S. Regional Drama Festival, they earned third place and an alternate spot in the prestigious State Finals, and 2 boys were selected to the all-star cast. Finally in the CHS finals, Austin took home the runner-up trophy for their acting, with 4 boys gaining all-star honors - Pretty good record!

Wasn't Saturday gorgeous? Would like to have been on that trip to N.H. instead of in that High School Gym - but duty calleth - Bet it was great tho!

Troop 354 Girl Scouts will be with a White Elephant Sale from 10 to 4 at the Congregational Church on Saturday the 25th with ham and bean supper from 6 to 8. The tariff is $1.25 and kids under 12 go for 90¢. Proceeds will go towards their trip next year.

Dave Walsh writes:- "Hi Nancy, How ya doin? I've only gotten 2TC in the last 3 months and my mother paid for them - what's happening about Town Elections etc - I'm doing great! Jesus Christ is leading me right thru this path of Shadow and Death. Well, I'm fine. Write soon and anybody else that would like to write. Love, David. "No 14, or is it No. 17 Son?" Oh - well, See ya, Mom."

(Thanks Dave, for those thots. Hope you have the news by now - will check Henry on the mail - but could there be a lad from Willie in the mail room? It's happened before! Will write separate, just in cases - Folks - Cards and notes to David Walsh 032425279 1st Lt. NAVSCOLCOM, Mare Island, Vallejo, Ca. 93529 - and the Clan joins me in sending love, Dave.

Oh - the Clan - Well, whatta ya know - back at the Hut - suddenly the kitchen went together and at the circuit of the black snake on Sunday - the diningroom is empty they're all working together and the "remember when's" start showing up - of course there's a little slowness in the beginning - but when they all get going - we finally end up pionked on the floor hilarious with tears running down our cheeks at each other's tales. Then, of course, they wander away and have to finish on Monday - but let this Gal tell ya - there's no group like them and do those first 2 fellas have talent - They're great!

Oops - nearly forgot a very important bit of info - Today thru Sunday, the Art Exhibit at Burl Mall. Free, and you can talk to to the artists and watch them at work and even buy something which strikes your fancy, sculpture, paintings and what-not.

So - provided the gremlins, the IRS, the continuous School Com. seances, the real estate, or the weather doesn't get Her - She'll see ya next week - Meanwhile -

Love Ya! Uh Huh!

Easter
is on its way!
NOTICE
We Are Open For Business
In Our New Location
Colonial Park Mall
Jct. Routes 129 & 38
GIVEN'S FLOWERS
658-3520

Births

BANGS: Misty, first child to Mr. and Mrs. Paul W. Bangs, formerly of Wilmington, now of Merrimac, on March 15th at Exeter Hospital.

Grandparents include Mr. and Mrs. George Durgin of Framingham and Mr. and Mrs. William M. Bangs of Main Street, Wilmington.

Great grandparents are Mrs. Marguerite Bangs of Glen Road, Wilmington and Mr. and Mrs. C.L. Nichols of Charlestown.

EMRICK: Derek Matthew, second child, second son to Mr. and Mrs. Grant Emrick of Fairmeadow Rd. on March 11th at Winchester Hospital.

Grandparents include Mr. and Mrs. Frank Tassone of East Boston and Mrs. Earl Emrick of Durant, Oklahoma.

HANCOCK: Fayette Theresa, first child to Mr. and Mrs. Francis Hancock of Grande Street on March 16th at New England Memorial Hospital.

HENDERSON: Kerrie Marie, first child to Mr. and Mrs. Stephen F. Henderson of Vermont Avenue Dracut on March 10th at Winchester Hospital.

Grandparents include Mr. and Mrs. Robert Gamlin of Reading Avenue and Mr. and Mrs. Frank Santo of Beacon Street.

LACAVA: Mark, second child second son to Mr. and Mrs. Martin A. LaCava of Crest Avenue on March 15th at Winchester Hospital.

Grandparents include Mr. and Mrs. Angelo Melchionna of First Street, Medford and Mr. and Mrs. Michael LaCava of Bremon Street, East Boston.

MUTCHLER: Denise to Mr. and Mrs. Bruce Mutchler of Wilmington on February 20th at Winchester Hospital.

Grandparents include Mrs. Beatrice Fenlon of Wilmington and Mr. and Mrs. Ernest Mutchler of Nottingham, N.H.

SCHOOL CAFETERIA MENUS

Walker, Whitefield, Swain and Buzzell Schools

Monday: Baked Sausage, Applesauce, Mashed Potato, Peas, Bread and Butter, Scooter Pie and Milk.

Tuesday: Juice, Grilled Frankfurter on Buttered Roll, Fluffy Rice, Green Beans, Toll House Square and Milk.

Wednesday: American Style Pizza, Meat Sauce, Potato Chips, Buttered Carrots, Ice Cream and Milk.

Thursday: Baloney, Cheese and Tomato on Buttered Roll, Potato Sticks, Whole Kernel Corn, Pudding with Topping and Milk.

Friday: Good Friday, No School.

Wildwood, Woburn St., Glen Rd., Boutwell and Shawsheen Schools

Monday: Cheeseburger on Buttered Roll, Buttered Noodles, Green Beans, Fruit and Milk.

Tuesday: Chicken Croquette, Gravey, Mashed Potato, Peas, Cranberry Sauce, Bread and Butter, Pudding with Topping and Milk.

Wednesday: American Style Pizza, Meat Sauce, Potato Chips, Buttered Carrots, Ice Cream and Milk.

Thursday: Baked Sausage, Applesauce, Mashed Potato, Corn Bread and Butter, Whole Kernel Corn, Scooter Pie and Milk.

Friday: Good Friday, no school.

High School, North and West Intermediate Schools

Monday: Baked Sausage, Applesauce, Mashed Potato, Peas, Corn Bread and Butter, Ice Cream and Milk.

Tuesday: Ham, Cheese and Tomato on Bulkie Roll, Fluffy Rice, Green Beans, Toll House Square and Milk.

Wednesday: American Style Pizza, Meat Sauce, Potato Chips, Whole Kernel Corn, Peanut Butter Square and Milk.

Thursday: Home Baked Beans, Cole Slaw, Grilled Frankfurter on Buttered Roll, Deep-Dish Apple Pie and Milk.

Friday: Good Friday, no school.

Our Country Store
purveys all manner of gifts and tasty treats for yourself or to please a friend, including candies, baked goods, Colonial glassware, pewter and pine reproductions.
Pewter Pot
MUFFIN HOUSE
285 Main Street
Wilmington -- 658-6021

ALBERT'S COIFFURES
296 Shawsheen Ave. (Corner Hopkins St.)
Wilmington Tel. 658-9394
Specializing in
Permanents & Hair Coloring
OPEN
Monday, Tuesday, Wednesday & Saturday 9 to 5:30 PM
Thursdays and Fridays 9 AM to 9 PM
WALK IN SERVICE

Green Power.
It would help you drive a better bargain.

Green Power is an auto loan from Middlesex Bank. It's what you have when you walk into an auto show room, look the salesman straight in the eye, and talk to him like a cash buyer. It's a great feeling. All it takes is cash. And that can be easily arranged. If you bank at Middlesex, you know us, we know you. So we can clear your loan quickly. If you don't bank at Middlesex yet, you'll still get the same prompt, courteous service our regular customers receive. And why not? Green Power can help anyone drive a better bargain. Come in and get Green Power now.

Middlesex Bank
The bank that helps you manage your money.

YOUR Pharmacist SPEAKS

by Louie

Care of the eyes is as important as care of any other part of the body. The eyes, after all, are our major aid in the proper daily functioning of our lives.

Periodic eye examinations are very important. How and where you read and study or work is important too. Never try to read in a glare. Provide lighting for your home and office which does not glare. Rest your eyes frequently when you are doing close work.

Consult a specialist immediately if unusual eye symptoms develop. Anyone over forty years of age should have a glaucoma test every two years.

Eye care and general health care go arm-in-arm. **Silver Lake Pharmacy**, 52 Main St., offers the finest selection of health aids - Cosmetics by the leading makers - including Clairol products - Open seven days a week from 9 am to 10 pm, 658-4617.

Helpful Hint: Always wear safety glasses if you are in a situation that might be dangerous for your eyes.

Louis Hailson, Reg. Pharm.
SILVER LAKE PHARMACY
52 MAIN STREET
658-4617
WHERE YOU GET THE RED CARPET TREATMENT

Making a toll call within Massachusetts?

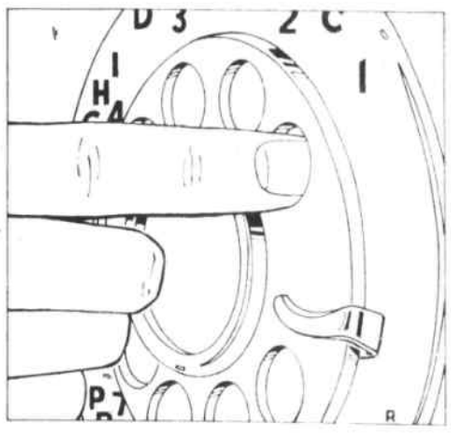

With today's rates . . .

You'll Save 33% on calls dialed direct "phone-to-phone" rather than asking operators to place your call.

You'll Save 50% on calls dialed direct "phone-to-phone" rather than calling person-to-person.

Thrifty Bay Staters dial direct and save.

Dial direct rates do not apply to coin, credit card, collect, person-to-person, and hotel guest calls, or to calls charged to another number.

New England Telephone

JUDITH ANN IRWIN TO WED ROBERT FLORES

Mr. and Mrs. John R Irwin of Glendale Circle announce the engagement of their daughter, Judith Ann to Robert M. Flores of Gowing Road.

A June 10th wedding is planned.

JOYCE MACIVER TO WED IN APRIL

Mr. and Mrs. Maurice E. MacIver of 10 Lloyd Rd. announce the engagement and coming marriage of their daughter, Joyce Lelia, to Donald Joseph Currier, son of Mr. and Mrs. Walter H. Currier of 19 Marjorie Rd.

Miss MacIver is a 1970 graduate of Wilmington High School and is employed as a secretary at Suburban News Agency, in Hudson, Mass.

Mr. Currier is a 1967 graduate of Wilmington High School and is employed as an automotive technician at Lincoln-Mercury Inc. in Lowell.

The wedding will take place on April 22nd, at an 11 o'clock Nuptial Mass at Saint Dorothy's Church.

VA News

With more Vietnam era servicemen returning to civilian life, the Veteran's Administration points out again that certain deadlines are important:

In ten days: Report address to Selective Service through local board (in person or by mail)

In thirty days: Register with Selective Service or any local board if not already registered.

In ninety days: Apply to former employer for re-employment.

As soon as possible: Register with local state employment service office. (Veterans have up to a year to apply for unemployment compensation, but applications filed after a long period of unemployment could result in a lower rate of compensation)

In 120 days: Or one year if totally disabled at time of separation, convert Servicemen's Group Life Insurance (without examination) to private, commercial policy.

Within one year: From date of notice of VA rating on disability, apply to any VA office for GI life insurance based on service connected disability.

Within one year: Apply to any VA office for dental care.

As soon as possible: Apply to any VA office for GI education or training, which must be completed within eight years of separation from military service.

VA notes there are no time limits for veterans to:

Apply: To any VA office for a GI loan guaranty to buy a farm, or buy, build or improve a home.

File claims: With any VA office for compensation for service connected disabilities or disease, or apply for hospital care.

Seek assistance: From local offices of state employment service in finding employment or entering Labor Department job training programs.

VA states that its 72 veteran's assistance centers around the country are ready to help veterans get a quick start in civilian life.

Questions and Answers

Q. If I surrender my National Service Life Insurance permanent plan policy for a paid up policy would I still receive dividends?

A. Yes, but they would not be as large as dividends on your existing policy.

Q. How can I get my clain for a pension considered since I have no doctor and can't afford the cost of an examination required by VA?

A. Suggest you notify the VA office handling your clain what your disabilities are, describing them as best you can. Be sure to make clear you don't have money to pay for the examination and perhaps arrangements can be made for a VA clinic to examine you.

Q. I have never used my World War II GI loan entitlement. May I use now to buy a mobile home?

A. Yes. The mobile home loan benefit is available to eligible veterans and servicemen who have $12,500 guaranty toward the purchase of conventional homes. VA will guarantee up to 30 percent of approved loans for mobile homes.

SPOTLIGHTERS NAME BOARD OF DIRECTORS

At a recent meeting of the Wilmington Spotlighters, Jean Waugh, Mike Harrington, Ann Whitney, Mary Ann Ackerman, Ron Whitney, Shannon O'Brien, Verenice Hensey, Cheryl Campbell and Harry Johnson were elected to serve on the Board of Directors of the group for the next year.

TEMPLE SHALOM SISTERHOOD TO CONDUCT FASHION SHOW

A Spring Fashion Show by "My Botuque of Haverhill" will be presented at Temple Shalom on Salem Street on Tuesday, April 18th, beginning at 8 pm. Donation will be $1.25.

A door prize will be awarded and refreshments will be served. A most enjoyable evening is planned and the public is cordially invited.

DOMENIC DANIELI BACK AT ALAMEDA

Navy Seaman Apprentice Domenic R. Danieli, son of Mr. and Mrs. Domenic Danieli of 11 Brattle Street, returned to Alameda, Calif. on Saturday with the nuclear powered aircraft carried USS Enterprise, ending an eight month deployment with the Seventh Fleet in the Western Pacific, South China Sea and Indian Ocean.

MEN'S HEALTH CLUB

Tours of the Exclusive Men's Health Club and brochures on the facilities and activities available can be handled at the main desk.

There are many lockers open, but an early tour is suggested to avoid the spring rush for Health Club membership.

Drop in to the North Surburban YMCA, 137 Lexington Street, Woburn anytime and tour this area. For further details, call 935-3270.

GOLDEN AGERS INVITE NEW MEMBERS

Members of the Wilmington Golden Age Club conduct a meeting on the second Thursday of each month in Metcalf Hall at the United Methodist Church at 1 pm.

All residents of Wilmington, sixty years old or over are eligible to join. Anyone in this age group is cordially invited to attend one of the meetings and learn for themselves of the pleasures of good fellowship.

ANNOUNCING...

Open House

At Our New
WILMINGTON OFFICE

AT LUCCI'S SHOPPING CENTER, LOWELL STREET

SATURDAY, MARCH 25 **8:30 A.M. to 12 NOON**

Come see what we've been building for you — for your family and friends, and for local business firms. See the newest and latest in modern banking convenience. Just swing into the Lucci Shopping Center and there you are, with lots of parking and other shopping facilities as well.

MANAGER KENNETH BUSHEY, JR. INVITES YOU . . .

to get to know the folks at Melrose-Wakefield Trust so you can think of them as your Personal Bankers. Ken Bushey is assisted by loan officer Jack Gagliardi and Tellers Anne LaRocco, Natalie Logue and A. Ruth Ready.

Who will be MILLIONAIRE FOR A DAY?

That's right. As a door prize someone will win interest for one day on $1,000,000. It could be you! Be sure to sign an entry blank when you come. Official drawing at noon, same day.

UP-TO-DATE SERVICES FROM YOUR SHAWMUT ASSOCIATION BANK

Single Statement Banking

Our "Personal Banker" Account combining checking, savings and credit for better money management. (No checking service charges under this plan if you keep $100 in checking or $500 in savings.)

Supercheck Revolving Credit

A cash reserve for extra buying power.

Start a collection of MAGNIFICENT ENGLISH BONE CHINA

Just flown in from London for our savings customers. Open a savings account with $25 or more, or deposit $25 in your present account and receive one cup and saucer free during our celebration days. Additional cups and saucers may be purchased for only $2.25 with subsequent deposits of $10 or more. Choose from twelve gorgeous patterns. Start your collection this Saturday.

SOUVENIRS MUSIC REFRESHMENTS

AND ALL THESE SERVICES

FREE MINIMUM BALANCE CHECKING
4½% SAVINGS
5% SAVINGS CERTIFICATES
SAFE DEPOSIT BOXES
LOANS FOR EVERY PURPOSE
DRIVE-IN BANKING
TRUST SERVICES
FOREIGN EXCHANGE
MONEY ORDERS & TRAVELERS CHEQUES
PHOTO MASTER CHARGE
NIGHT DEPOSITORY

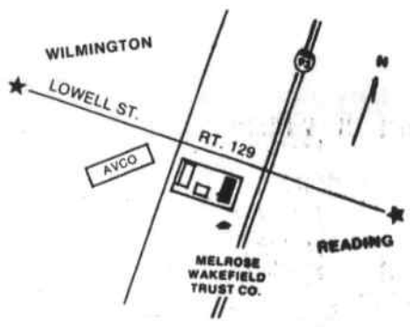

BANKING HOURS

WEEKDAYS
Lobby: 8:30 A.M. to 2:30 P.M.
Drive-up: 8:30 A.M. to 5:00 P.M.

FRIDAY EVE: 6:30 P.M. to 8:00 P.M.

SATURDAYS: 8:30 A.M. to 12 NOON

Have a Personal Banker at your side, on your side.

MELROSE-WAKEFIELD TRUST
Company
A Shawmut Association Bank Member F.D.I.C.
WAKEFIELD MELROSE WILMINGTON

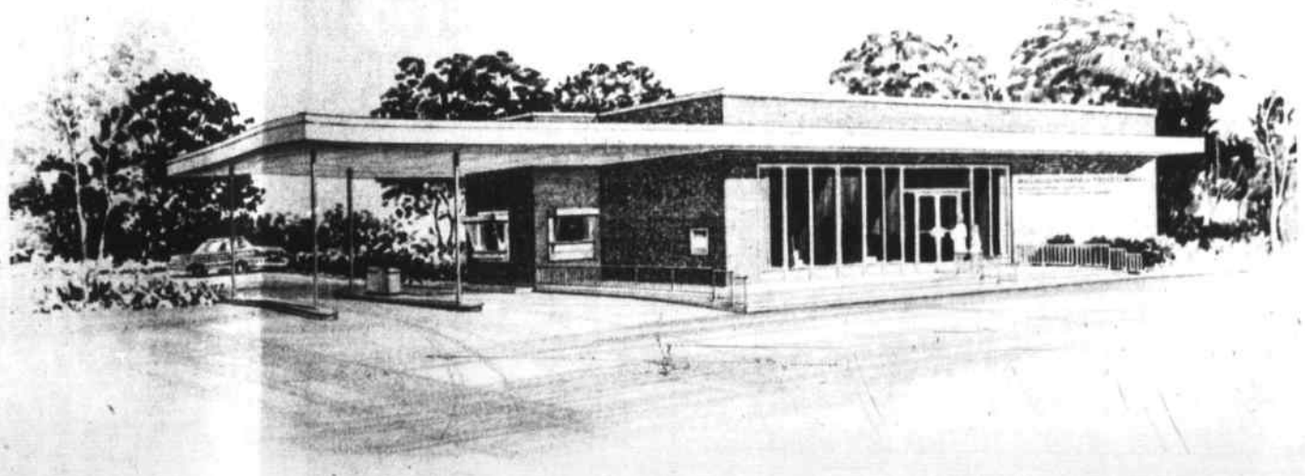

Art Show at Burlington Mall

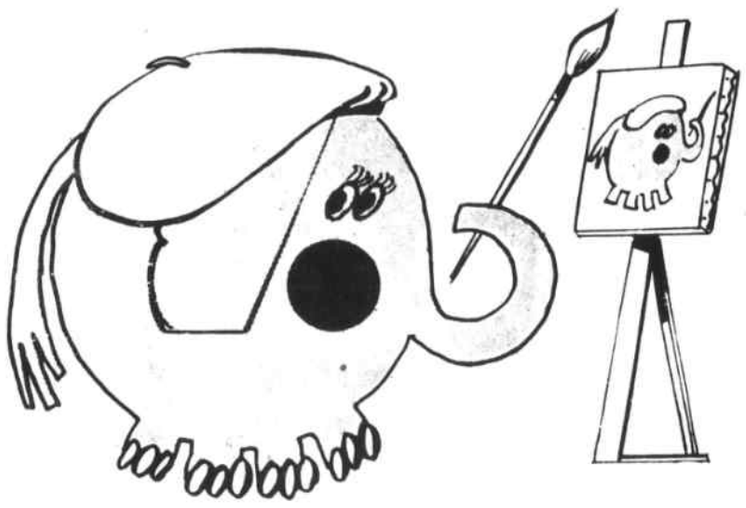

100 ARTISTS - 2000 PAINTINGS
BURLINGTON MALL'S 5th Annual
Spring Art Show
on the Mall March 23 - 26

Coming Events
March 28 The Philanderers
March 29 - April 1 4-H Rabbit Show
April 17-22 "New Hampshire Week"
May 4-6 4H Fair
Fifth Annual Spring Art Show
March 23 - 26

Burlington Mall
Biggest of them ALL
Route 128, Exit 42, Burlington
Middlesex Turnpike

Deaths

SERVICES TOMORROW FOR DANIEL H. PETERS

Daniel H. Peters of 45 Aldrich Road, was pronounced dead on arrival at Choate Memorial Hospital where he had been taken after being stricken suddenly ill on Tuesday morning.

Mr. Peters, who was 70 years of age at the time of his death, was born in Fitchburg, the son of the late John and the late Ezelda (Fontaine) Peters. He had been a resident of Wilmington for the past 31 years.

Mr. Peters who was a retired Staff Sargent of the U.S. Army had served with the Army for 25 years.

Besides his wife, Mrs. Anna R. (Beatrice) Peters, he is survived by his brother Gilbert Peters of Fitchburg and many nieces and nephews.

The funeral will be held at the W. S. Cavanaugh & Son Funeral Home, 374 Main Street on Friday morning at 9:15 followed by a Funeral Mass at St. Dorothy's Church at 10. Burial will take place in the family lot, Wildwood Cemetery.

Friends may call at the funeral home on Thursday from 2 to 4 and 7 to 9 pm.

FUNERAL SERVICES FOR CATHERINE T. DOHERTY

Mrs. Catherine T. Doherty, of 72 Lakeview Ave., South Tewksbury died at St. John's Hospital on Thursday, March 16th following a brief illness.

Mrs. Doherty, who was 78 years of age at the time of her death, was born in East Boston, the daughter of the late George and the late Agnes (Skeffington) Doherty. She had been a resident of South Tewksbury for the past 26 years and was a member of St. Dorothy's Church B.V.M. Sodality.

Mrs. Doherty was the wife of the late William F. Doherty, and the mother of Mrs. John (Edythe C.) Sullivan of Belmont, Mrs. Guy (Catherine T.) Clinch of Wilmington, Mrs. Frank (Agnes C.) Romano and the late William G. Doherty of Tewksbury. She is also survived by her two sisters, Mrs. Mary Barnett of Chelsea and Mrs. Eleanor Rebholz of Revere; her 26 grandchildren and 37 great grandchildren.

The funeral was held from the W. S. Cavanaugh & Son Funeral Home, 374 Main Street on Monday morning at 9:15 followed by a Funeral Mass at St. Dorothy's Church at 10, celebrated by Rev. Father Joseph Leahey. Burial took place in the family lot, Tewksbury Cemetery.

Pall bearers for Mrs. Doherty were her grandsons: Paul Sullivan, Edward and William Doherty, Thomas, Richard and George Romano.

HOSPITAL FUND CONTRIBUTIONS

Relatives, friends and loved ones honored by contributions in their memory to the Wilmington Regional Hospital Building Fund this week include:

W. Paul Duggan from Mr. and Mrs. Joseph Balestrieri.
W. Paul Duggan from Mrs. Emelie Motroni.
W. Paul Duggan from Amerigo Nardini.
W. Paul Duggan from Mr. and Mrs. Leonard Chisholm.
W. Paul Duggan from Mr. and Mrs. Philip S. Park.
Lovingly remembered and sadly missed by his family, William T. Farrell, Sr.
Lovingly remembered and sadly missed by their family, Grace F. Farrell.
Lovingly remembered and sadly missed by his family, John F. Farrell.
Lovingly remembered and sadly missed by his family, Robert P. Laird.
Lovingly remembered and sadly missed by his family, Edmund A. Dengeleski.
Lovingly remembered and sadly missed by his family, Dr. Chester J. Dexter.
Michael A. Gatta from Mr. and Mrs. Joseph Balestrieri.
Michael A. Gatta from Mr. and Mrs. Charles Ingalls.
Joseph D. Harrington from Mr. and Mrs. Frank A. Mango.
Joseph D. Harrington from Mr. and Mrs. Leo G. Barry.
Joseph D. Harrington from Mrs. Ernest DiGirolamo.
Joseph D. Harrington from Mr. and Mrs. Richard Keane.
Alphonse L. Savignac from The Wilmington Women's Club.
Alphonse L. Savignac from Mr. and Mrs. Leonard Chisholm.
Alphonse L. Savignac from Mr. and Mrs. William Dayton.
Alphonse L. Savignac, father of Paulette Savignac, from the Children in Room 12 of the Boutwell School.
Robert C. Howe from Mr. and Mrs. Harry Butt.
Robert C. Howe from Mr. and Mrs. Frank Mauriello.
Robert C. Howe from Mr. and Mrs. John Taylor.
Robert C. Howe from Dorothy and Brenda Stead (Chelsea).
Robert C. Howe from Mr. and Mrs. Leon Durette.
Robert C. Howe from Mr. and Mrs. Frank W. Parrott.
Guy S. Vitagliano (Medford) from Mrs. Ernest DiGirolamo.
Isabelle McKenna from Albert Miano, Sr. (East Boston).
James Maloney (Everett) from Mr. and Mrs. Henry J. Briggs, Jr.
Elizabeth Miano, lovingly remembered by her husband, Albert Miano, Sr. (East Boston).
Amelia DeLauri (Everett) from Mr. and Mrs. Henry J. Briggs, Jr.
Joseph D. Harrington from Mr. and Mrs. Byron E. DeGraffenreid.
Joseph D. Harrington from Mr. and Mrs. James Burke.
Joseph D. Harrington, Sr. from: Mr. and Mrs. Walter Szumowski (Maine), Mr. and Mrs. Kevin Callahan, Mr. and Mrs. Will Kelloway, Mr. and Mrs. Dwight Maxwell, Mr. and Mrs. Norman A. Reid, Mr. and Mrs. Joseph Nistico and Mrs. Edna Berger.
Joseph D. Harrington, Sr. from Mr. and Mrs. Jack Quinn.
Nicholas Kozulkevitch from Mr. and Mrs. William Dayton.
Harry Gayton (Saugus) brother-in-las of James Capozzi from Charles and Rita Ingalls.
Robert C. Howe from Mrs. Violet Williams (Avon).
Robert C. Howe from Mr. and Mrs. George Tilley (Hamilton).
Robert C. Howe from Mrs. Elizabeth Squires (Everett).
Robert C. Howe from Mr. and Mrs. Charles Squires (New Jersey).
Robert C. Howe from Mrs. James Jaynes (Revere).
Robert C. Howe from Mr. and Mrs. George Luscombe (Revere).
Robert C. Howe from Frank Fitzgerald (Everett).
Robert C. Howe from Mrs. Jennie Butt (Chelsea).
Robert C. Howe from Mr. and Mrs. Joseph Nolan (Melrose).
Robert C. Howe from Warren Squires (Revere).
Catherine T. Doherty (Tewksbury) from Mr. and Mrs. Donald O'Connell.
Catherine T. Doherty (Tewksbury) from Mr. and Mrs. William Leahy, (Tewksbury).
Catherine T. Doherty (Tewksbury) from Mr. and Mrs. Leonard Chisholm.
Edward Hogan, uncle of Miss Vivian Joyce, from Mr. and Mrs. William J. Mann.
Joseph D. Harrington, Sr. from the Mathematics Department of Wilmington High School.
Joseph D. Harrington, Sr. from the Wildwood School Faculty.
Joseph D. Harrington, Sr. from Mr. and Mrs. Alex Quandt (Florida).
Joseph D. Harrington, Sr. from Mr. and Mrs. Henry T. Flight.
Edward Deschenes, father of Edmund Deschenes from Douglas Palmer.
Catherine Dunnigan, sister of Marcia Carbone, from Miss Sheila Croswell.
Catherine Dunnigan, sister of Marcia Carbone, from Miss Debbie Tomasi.
Catherine Dunnigan, daughter of Mr. and Mrs. Lewis Carbone, from Mary and Carmela Calandrello.

BOBBIE BRODIE, SISTERHOOD PRESIDENT

At a recent meeting of Temple Shalom Sisterhood, an election of officers was held with Mrs. Bobbie Brodie of Winter being named president.

Assisting Mrs. Brodie during her term of office will be: Mrs. Elaine Williams who will act as Vice-President; Mrs. Estelle Nelson who will serve as Treasurer and Mrs. Sheila Elfman who was elected to serve as Secretary.

During the same meeting, the group honored Past-President, Mrs. Mae Ginsburg for her leadership and guidance and named the following Committee Chairmen: Program, Mrs. Sylvia Blum; Membership, Mrs. Myrna Ginsberg; Sisterhood Bulletin, Mrs. Sandra Jacobs and Mrs. Maxine Vasquez.

Mrs. Sylvia Levine will serve as Publicity Chairman.

RIDE A BIKE FOR RETARDED NEEDS LOCAL CHAIRMAN

The Massachusetts Association for Retarded Children (Marc) is in need of a Community Chairman to organize "Ride a Bike for the Retarded" day in Wilmington.

The event, co-sponsored by Marc and numerous other organizations, will take place on Sunday April 30th.

Anyone interested in organizing a ride in Wilmington is invited to contace Campaign Chairman, Ernest J. Boch, % MARC, 680 Main St. Waltham, or call 617-891-7710.

The event will raise funds to benefit the Commonwealth's 165,000 retarded citizens. Bike riders will obtain pledges covering each mile they travel.

The Community Chairman is needed to work with local officials to determine the route and supervise the collection of pledges at the close of the day.

SUSAN HOLBROOK TO WED JOHN MERRILL

Mr. and Mrs. David A. Holbrook of 45 Church St. announce the engagement of their daughter, Susan, to Cadet 1/c John Scott Merrill, son of Mr. and Mrs. John W. Merrill Jr. of 125 Grove Street, Reading.

Miss Holbrook is a 1968 graduate of Wilmington High School and is presently attnding Ball State University in Muncie, Indiana.

Cadet Merrill is a 1968 graduate of Reading Memorial High School and is presently a senior at the United States Coast Guard Academy in New Longon, Conn.

No date has been set for the wedding.

WILMINGTON HOSPITAL BUILDING FUND
Memorial Contributions may be sent to Middlesex Bank % Joseph Maffeo, Wilmington, or the Wilmington Center Pharmacy % Mrs. Lillian Woodside, Main Street, Wilmington.
All contributions will be acknowledged.

Game Night
Every Tuesday 8 PM
K of C Hall
School Street Extension

CUSTOM HOME BUILDING REMODELING
Wm. F BUTT & Son
6 WEST ST.
658-2221 658-3716

DYSON, LOWREY & GULBRANSON ORGANS
Spinet, Console & and Pianos
(5 to Chose From)
NEW & REBUILT PLAYER PIANOS
SPECIAL: NEW Spinet Piano in Walnut Finish $539
DYSON
Tel. 453 - 3824

Don't Use Your Savings On a Rainy Day When You Can Have a New Umbrella
See Page 9

BP GIBBS
BARGAIN DAYS
FREE GAS!
AT 496 MAIN ST (RT. 38)
WILMINGTON BP
GOOD ONLY MARCH 23,24,25,26,27 & 28 1972
COUPON FREE COUPON
WITH THIS COUPON
$1.00 OFF ON A FILL-UP
MINIMUM 10 GALLONS
GOOD ONLY AT WILMINGTON BP
OFFER EXPIRES MARCH 28, 1972
CLIP AND REDEEM
PLUS..... THESE BONUS SPECIALS

1 Qt. PEPSI-COLA 8 COUPONS
Giant Size TIDE 24 COUPONS
22oz. JOY 14 COUPONS
BEER KING GLASS 6 COUPONS
YOU RECEIVE ONE BONUS COUPON WITH EVERY $1 GAS OR OIL PURCHASE

YEE'S DRIVE - IN RESTAURANT
The Finest in Cantonese Cuisine
LUNCHEON SPECIALS SERVED DAILY
Except Sundays & Holidays
Open Mon - Thurs 11:30 - 10
Fri & Sat until 11
Sundays & Holidays 12:30 - 10
232 LOWELL ST
RTE 129 - OPP AVCO
658-6500

DUNN'S BIKE SHOP

Schwinn
Take Route 28 to Haven St. at Reading Square Gould St. off Haven St. off Rte. 28
Hours 9 to 6
Thurs. & Fri. til 9
READING 944-9221
16 GOULD ST., READING

INCOME TAX
DONE ON-THE-SPOT
At YOUR home or office. Serving individuals & small business firms since 1951. No red tape. Datatab Co.
Mr. Kuklinski
245 - 3218
(Wakefield)

EASTER SPECIAL
ORDER NOW!!
CERAMIC RABBITS & DUCKS
Personalized
To Fill With Your Favorite Goodies
ALSO
RUSSELL STOVER EASTER NOVELTIES
Harry Sandler, Reg. Ph.
NORTH WILMINGTON PHARMACY
658-3353

Leon Richards HAIR STYLIST
Featuring ESKA HIDDEN SUPPORT
NAMCO APPROVED
CLOSED MONDAYS
OL 8 4648
Gardner Professional Building
281 MAIN ST., WILMINGTON

A Unique Offer!
SPRING TUNE-UP
Includes:
Car Exteriors Simonized
Engines Degreased, Painted and Sealed.
Car Interiors, including Headliners, Shampooed Carpets Dyed, If Necessary
ALL FOR $32.95
Inspection Period April 1 - May 15
Station No. 12312

Snow Plowing
Allstate Motor Club
CarLeasing
Master Charge
Bank Americard
OPEN TO MIDNIGHT
General Repairs
Road Service
SHELL AAA
NORTH WILMINGTON SHELL
361 Middlesex Ave.
North Wilmington
658-9498

OIL HEAT IS PROVED BEST
Safe, Dependable, Economical & Clean
FITZGERALD FUEL

287 Main St., Wilmington
658 - 3383

Selling (Your House) The Fast Easy Way

by Thomas Forsyth

Common Price Errors

Here are the most common mistakes I have seen people make in pricing their houses. Generally, these errors only lead to problems and frustration.

1) Add the price you paid for the house and the cost of any improvements. This could lead to a price which might be very high or low depending on what you have spent and how you spent it.

2) Set your price according to how much profit you need to buy a new house you want. Again, you could be way off either way.

3) Price your house the same as one you saw for sale just like it six towns away. Their price could have been way off and prices vary greatly from town to town.

4) Price your house according to what your neighbors think their houses are worth. Your neighbors don't know any more than you do. They are probably way off.

5) Base your price on what you have heard similar houses were sold for. Most of the time, these rumors are wrong.

Reliable real estate service is as handy as your telephone. At Forsyth and Company, we concentrate on doing a good job for our customers, because if we do, business will take care of itself. Call about any real estate problem. If you are selling, find out about our file of buyers, advertising program and MLS service.

"Difficult problems solved immediately, the impossible takes a little longer."

Next Week: How to Use an Appraisal

Forsyth and Company
498 Main Street, Wilmington
658 - 5915

Remodel Now
LUMBER
WINDOWS
HARDWARE
TOOLS
TILE
MASON'S MATERIALS
INSULATION
PAINTS
DOORS
master charge
COMPLETE LINE OF POOL CHEMICALS
WILMINGTON BUILDERS SUPPLY
334 Main Street 658 - 4621
DEPENDABLE SERVICE FOR 40 YEARS

LARRY PINTO
Claims Adjuster
Investigator
Automotive & Auto Body Needs
INSURANCE ESTIMATES AND APPRAISALS
Auto Body Repairs
2 DADANT DRIVE
NO. WILMINGTON
658-2729

PROJECT ID FOR WILMINGTON

Project Identification is the latest program in the Wilmington Police Department, a program which is being sponsored by the Wilmington Rotary Club, and which is also arousing interest in at least one insurance agency.

Inspector John Harvey of the Wilmington Police has fifteen electric engraving pencils, which can be used to mark property of the type which is frequently stolen, such as TV sets, cameras, and other household items. The property can have the owner's name engraved on it, or his license number, or Social Security Number. Bicycles and other property can also be marked.

The electric pencil will write on plastic, wood and steel. If an item should be stolen after being marked it can then be readily identified by the police, and the owner.

A citizen who borrows the electric pencil from the Police Department is given a window or door sticker, when the pencil is returned. The sticker informs would-be thieves that stealable property in that home has already been marked for identification - thus tending to reduce the chances of theft.

THIS SWINGER IS MINE: A youngster is marking his Swinger Camera with an engraving pencil, borrowed in this instance from the Bedell Brothers. The Wilmington Police have fifteen engraving pencils to loan to people who wish to properly identify their property.

THEY STARTED THE PROGRAM: Rodney Laughton, of Adams Street (left) observed an Identification Project in operation, in New Mexico last fall, and this was the first that Wilmington heard of the project, which is now being sponsored by the Rotary Club. Police Chief Paul Lynch is beside Laughton, then Sandy Carlisle, president of the Wilmington Rotary, and Inspector John Harvey of the Wilmington Police.

GAIN HONORS AT UNIVERSITY OF MASS.

Thirteen local students have been named to the first semester undergraduate honors list at the University of Massachusetts.

Highest honors: Philip D. Krey, son of Pastor and Mrs. Rudolph Krey of Andover Street and Ann L. Robertie, daughter of Mr. and Mrs. George Robertie of Woburn Street.

First high honors: Diane Houle, daughter of Mr. and Mrs. Omer Houle of Chestnut Street; Susan L. Keane, daughter of Mr. and Mrs. Richard Keane of North Street; Janet O'Brien, daughter of Mr. and Mrs. John O'Brien of Adams Street and Susan M. Beers daughter of Mr. and Mrs. William Beers of Truman Road.

Third honors: Robert H. Barry, son of Mrs. Winifred M. Barry of Powder House Circle; Clara J. Boyden, daughter of Mr. and Mrs. Leonard Boyden of Nichols Street; Albert Cuoco, son of Mr. and Mrs. Albert Cuoco of Longview Road; Stanley Frankel, son of Mr. and Mrs. Stanley Frankel of Pinewood Road; Margaret M. Mahoney, daughter of Mr. and Mrs. Francis Mahoney of Fairfield Road; Dale L. Peterson, son of Mr. and Mrs. Ralph W. Peterson of Drury Lane and Paul G. Robertie, son of Mr. and Mrs. George G. Robertie of Woburn Street.

RABBI ABRAHAM WITTY TO VISIT TEMPLE SHALOM

Sunday, March 26th at 2 pm, Model Seder. The Passover Ceremony will be presented and explained by Rabbi Abraham Witty of Lowell. Families are cordially invited.

Tuesday, April 11th at 8 pm, the Sisterhood will conduct a meeting.

On Tuesday, April 18th at 8 pm, the Sisterhood will conduct a fashion show.

Spotlighters will perform April 7 & 8

CAROL COOKE AND ELAINE DEPASQUALE: Members of the Wilmington Spotlighters Theater Group rehearse under the guidance of Director, Ron Whitney, for their upcoming production of three one-act plays. The plays will be performed on April 7th and 8th at the Herbert C. Barrows Auditorium, beginning at 8 p.m. Colonial Photograph

Members of the Wilmington Spotlighters Theater Group will present three one-act plays on Friday and Saturday evening, beginning at 8 in the High School Auditorium.

The three plays include: "The Mice Have Been Drinking Again" by Cleve Haubold; "The Long Retreat by Julius Saltzman and "Next" by Terrance McNally. "The Long Retreat" is a drama while the other two plays are comedies.

Admission will be $1.50 for adults, $1.00 for students and 25c for senior citizens. Tickets are now on sale and may be obtained from any member of the group. They will also be sold at the door.

SHEM KREY ON HONOR ROLL AT WENTWORTH INSTITUTE

Shem Krey, son of Mr. amd Mrs. Rudolph Krey of 54 Andover Street has been named to the President's Honor Roll for the first semester at Wentworth Institute.

Shem is a student of Building Construction Technology.

WILMINGTON COMMUNITY FUND INC.

Financial Report to the Directors and Members of the Wilmington Community Fund, Inc.
Year Ended December 31, 1971

Cash on Hand January 1, 1971				
Reading Savings Bank-Book 34360		$ 9,654.54		
Reading Savings Bank-Book 56907		2,397.87		
Middlesex Bank-Account 17 981 031 5		363.69		$ 12,416.10
Receipts				
Contributions		13,619.74		
Interest		382.16		14,001.90
Available for Disbursement				$ 26,418.00
Disbursements				
Administrative				
Printing and Posters	$ 146.15			
Treasurer's Bond	38.00			
P.O. Box Rental	8.20	$ 192.35		
Contributions to Agencies				
Wilmington Family Couns. Serv.	3000.00			
Wilmington Crusaders	1200.00			
Boy Scouts	1000.00			
Girl Scouts	1000.00			
Little League	1000.00			
Wilm. Junior Camps, Inc.	1475.00			
Camp Fire Girls	750.00			
United Cerebral Palsy	2000.00			
Red Cross	750.00			
U.S.O.	350.00	12,525.00		
Direct Relief				
Christmas Remembrances	$ 411.55			
Food Orders	119.96			
Clothing	124.29			
Day Care	203.00			
Heat	41.60	900.40		13,617.75
Cash on Hand, December 31, 1971				
Reading Savings Bank-Book 34360		$ 9,794.83		
Reading Savings Bank-Book 56907		2,397.87		
Middlesex Bank-Account 17 981 031 5		607.55		$ 12,800.25

Richard D. Duggan
Treasurer

Cynthia's Bridal Service
281 Main Street, Wilmington (Gardner Bldg.)
Wedding Invitations – Bridal Gowns
Gowns for Bridesmaids and Mother of the Bride
Open Tuesday thru Saturday 10 am to 5:30 pm and evenings by appointment
658-4516 658-8513

Buying or Selling
C. A. MACK ASSOC. INC.
Real Estate
415 MAIN ST. WILMINGTON CENTER
658 - 2400
Member: Multiple Listing Service & Board of Realtors

Serving Wilmington over 35 Yrs
COOMBS FURNITURE
Quality & Economy
464 MIDDLESEX AVENUE
NORTH WILMINGTON 658-4511

WEDNESDAY NITE!
FISH FRY & CLAM BAKE
All You Can Eat!
FISH FRY $1.49 PER PERSON
FILET OF SOLE, FRENCH FRIES, COLE SLAW, TARTAR SAUCE, LEMON WEDGE
CLAM BAKE $4.95 PER PERSON
BOILED LOBSTER, STEAMED CLAMS CORN ON COB, SALAD-POTATO, CUP OF CHOWDER
TRUE ITALIAN STYLE FOOD
Rocco's
Rte 38 - Main St., Wilmington
COMPLETE TAKE-OUT SERVICE

DON'T FIDDLE AROUND WITH THE COMFORT AND SAFETY OF YOUR FAMILY!

Our famous Magnatherm equipment is the best friend your heating dollar ever had . . . it's skillfully designed to burn every drop of oil you pay for! Boilers for hot water or steam heating systems; furnaces for forced warm air systems (and a forced warm-air system puts you halfway home on our famous Carrier central air conditioning!); oil-powered hot water heaters; and the ingenious Aqua-Booster, which adds 40 gallons of hot water storage capacity to your present system without any extra chimney connection. Call us for a FREE home comfort survey!

MAGNATHERM OIL-POWERED HEATING EQUIPMENT
CALL 658-4700 DAY OR NIGHT
LOUIE'S
OIL HEAT SERVICE
312 MAIN ST., WILMINGTON

ADD A NEW LOOK for SPRING with WALLPAPER
Here's your ticket to Savings
NOW OPEN
Low Cost Beauty Paint & Wallpaper
TEXTURES 59¢ ROLL
PRE-PASTED TEXTURES $1.09 ROLL
Wide Variety of 100 Books On Hand
APOLLO IN STOCK
HALF PRICE
ALL NEW 1972 STOCK
KYANIZE PAINTS & SUNDRIES
You Are Welcome To Come In And Browse Around
ROSS PAINT & WALL PAPER
COLONIAL PARK MALL - ROUTES 38 & 129
WILMINGTON, MASSACHUSETTS Phone 658-4781

Looking for a contest where everyone wins?
We've got one for you at Woburn Savings!
And YOU'LL Win A "Grand Gift"
Every customer is a "winner" at Woburn Savings.
So help us celebrate the grand opening of our new branch at North Woburn Shopping Plaza at Rt. 38 and 128 APRIL 5 through APRIL 14.
Nothing to buy... everyone wins...
○ A beautiful, free umbrella (so you don't have to withdraw your savings on a "rainy day.")
○ A chance to get an RCA Portable Color TV.
○ Free useful gifts for all our friends – (little and big)
And start getting rich, too!
(Because we're paying the highest interest rates in savings history.)
Easy to enter....Guaranteed to win....
All you do to enter our contest and win a grand gift is tear off a check for $25 or more and mail it with the coupon below to open a new savings account with Woburn Savings. Then bring your new pass book to our Branch Opening APRIL 5 through APRIL 14 and get your gift.
You can get a free umbrella by opening your account in person at the new branch or our downtown office. Why miss the fun? Do it now. (Present accounts can receive the same gift by increasing their savings $25 or more thru April 14.)
Make me DRY...and RICH!
Here's my check for $_____ to open a new savings account at Woburn Savings (or increase my present account No._____) I'll receive my umbrella when I visit the Branch at the North Woburn Shopping Plaza at Rt. 38 & 128.
Please check Type of Account Desired:
□ 5¼% Regular (no minimum)
□ 5½% 90 Day Notice ($10 minimum)
□ 5¾% 1 yr. Certificate ($1000 minimum)
□ 6% 2 and 3 yr. Certificates ($1000 minimum)
Name– _____
Address– _____ City _____ State _____
Mail to or deposit with
WS WOBURN SAVINGS BANK
19 PLEASANT STREET • WOBURN, MASSACHUSETTS • TEL. 933-0040
Open Thursday nights from 6 to 8 p.m.

TRADING POST

NON-DISPLAY
25 WORDS OR LESS $1.00
Cash with order. 1.50 otherwise.
Repeat insertions of same copy, $1.00 per issue. Deadline: Tuesday Noon

FOR SALE: Parts for All Electric Shavers. Ronson, Sunbeam, Remington, Norelco and Schick Shavers. A & K Jewelers, Stoneham Square, 438-1250.

SECOND MORTGAGE LOANS: To Wilmington homeowners. $1500 and up, to pay bills - provide cash. Personalized terms, free counseling. 1 day confidential service. Robert Stevens, 729-6156.

WALL TO WALL: Carpet cleaning: Homes, Industries & Business. Cleaning of all size rugs, with free pickup and delivery. Full insurance coverage, satisfaction guaranteed. Also floor cleaning and full janitorial services. Free Estimates. Gallant Service Company 272-9432 or 272-7347.

FURNISHED ROOM: For gentleman. 658-4793.

HOUSE PAINTING: Inside & Out. Carpenter work & roof repairs. Free estimates. Robert Babine. 658-3321.

WEDDING, PORTRAIT & PASSPORT: Photography of distinction. The Colonial Studio of Photography, 380 Main St. Wilmington, 657-7845.

TEENAGERS: Come as you are; bring your Bible and guitar: Psalm 150 Romans 1-16, II Timothy 2-15. Every Thursday nite at 7. 658-8220.

PAINT SALE: Dented cans. 29c per quart. Latex-Marine-House-Deck; others. $1.50 to $2.50 per gallon. Hurry! Antique glaze, 22c; Benjamin Moore on sale! ROBERTS, Route 28, North Reading. 10 am to 5:30 pm.

EXPERIENCED HAIRDRESSER: Wanted, full or part time; good working conditions. 658-9332. Tuesday thru Saturday.

LAND WANTED: In or near wetland. 3 acres or more for farm use. John Ten Dyke, 2 Hathaway Road. 658-3084.

OPENING SOON: STITCH 'N KNIT: Colonial Plaza, Routes 38 & 129. Wilmington; fabrics - yarn - notions.

1970 FORD RANCH WAGON: Brown, power stearing; power disc brakes; electric tailgate window; roof rack; 351 cubic inch engine, radio, clean. $2195. 658-2040.

3 or 4 Bedroom Ranch For Sale
$26,500
One block to schools & stores. Almost ½ acre of tree-studded privacy. Immaculate move-in condition. Quiet residential neighborhood. 20% down, $226 per month, P I & T
Exclusive Broker
658 - 2195

LOST BANK BOOK: The following bankbook is lost and application has been made for payment of the amount in accordance with Sec 20.Ch 167 GL. Payment has been stopped Bankbook 5168 Commercial Bank & Trust M93t

FIREPLACE WOOD: All hardwood. $40.00 cord delivered. Size cut to order. Call 1-603-432-7281 after 5 p.m.

WILMINGTON: Three bedroom ranch. Dining room, screened porch, fireplace, disposer, combination windows. Fenced half acre, many trees and shrubs, walk to Shawsheen School. $31,900. Call 658-6943.

HORSE FEED: Also hay, livestock feed and dog feed for sale. Local Agway representative. William Johnson, 468 West St., Reading. 944-9161.

ROTOR ANTENNA SPECIALS: MATV & Communication specialist. A.B.L. Electronics Inc. 658-6377.

FOR SALE: 27 lb. bow, $3.00; size 9 hip boots, $9.00; 3 fly poles, $3.50 each; fish pole, $1.50; putter, $1.50; 7 iron, $2.50; 3 iron, $2.50; 2 drivers, $2.50 each; electric practice putter return, $1.50; basketball, $2.50; pair wooden oars, $5.00; minnow trap, $2.50. 658-9602.

FOUND: Siberian Husky type female dog, March 12th. 658-6181.

NO. WILMINGTON: Custom cape with central hallway. Six large rooms, 1½ baths, playroom, porch and garage. Situated on nicely landscaped lot, just a minute away from Route 93. Priced in the low 30's. Call the Poloians at 658-2845.

FOR RENT
In Wilmington Center
STUDIO APARTMENT
OFFICE
STORE
Call 944-9107

WANTED
Extra delivery man needed for Easter, preferably with a station wagon. Responsible man needed part time for the week of March 27th.
Perfect for retired gentleman.
Must be familiar with Wilmington - Tewksbury area
Apply
GIVEN'S FLOWERS
COLONIAL PARK MALL ROUTES 38 & 129
Wilmington

OPPORTUNITY
Fast growing manufacturer of photo-comp equipment offers interesting position in type face department. Some knowledge of typography required. Art background helpful. Please call personnel office for interview.
459-4111
GRAPHIC ARTS

LOST: Large male cat named Bart, lost after first big storm. 658-3040 after 5 pm.

ROOM FOR RENT: In South Wilmington. Kitchen privileges available. 658-4223.

FREE: Take yourself and your family to hear St. Paul's Boy's Choir on Friday (March 24th) at 8:15 pm at the High School Auditorium.

SHOP AT HOME: Custom slip-covers, draperies, upholstery, privately made by expert craftsmen. Tremendous fabric selection. Low overhead prices, also plastic slip covers. Romer's 459-7574, Lowell.

CRAFTS AND HOBBIES: Candle-making, dipit, macrame, papier mache, beads, liquid embroidery, stained glass, styrofoam, joli formafilm, modge-podge, art foam, art supplies, exacto knives, craft master paintings, planes, cars, ships, scientific models, cox planes and cras. Weinbergs, Main Street, Wilmington.

MAKE EXTRA MONEY: Woman urgently needed to train as Vanda Beauty Counselor in skin care program. 658-3580 or 692-4698.

FOR RENT: About one acre of clear farm land. 658-2293.

FOR SALE: 1970 Pontiac 4 door sedan; well under dealer's list. PS, pdb. Vinyl interior, AM/FM radio, dual track rear end Reg °F. Eng.
Overhead garage door opener - remote control. $60. 658-2637 after 6.

WALLPAPERING: And Painting. Free estimates. Call 658-6377.

DRESSMAKING: And alterations. Wedding gowns made to order. Call 658-4613.

WILMINGTON: Sunset Manor - The search is ended: If you look this will be your last stop; new custom built gambrel splits, 3 large bedrooms, master bedroom 18' x 16' fabulous kitchen and dining area, large entertainment size living room, forced hot water heat by oil, two fire places, two car garage, heated basement, oversized sundeck with panoramic view - Overall size of home, 50' x 26' 22,500 feet of land pick your own colors. $40,900, $38,900, $37,900 - Smith Realty, 658-3721.

WILMINGTON: New 3 bedroom splits, exclusive area, $35,000; new three bedroom splits $29,900 half acre of land; new 45' x 26' split, $33,900 - Smith Realty, 658-3721.

EXPERIENCED STITCHER: Will alter hems on dresses, coats, gowns, slacks, men's trousers and drapes. Reasonable. Call Rose, 658-9282.

CHEMPRO CLEANING: Specialists janitorial services for industry, homes, offices, windows, all types of floors, carpeting. Need help cleaning the house? We have women available. 658-5958.

DON'T TRADE YOUR CAR: Recondition it. Clean complete interior, wash and paste wax exterior, engine cleaned and painted. Free estimate. 658-5958. Chempro Automotive Reconditioning.

WANTED: Building lot in the Wilmington area. Call the Poloians at 658-2845.

1971 OLDSMOBILE CUTLASS "S": Two door hardtop; automatic powered stearing and power brakes; 11,000 miles; 10 months old; lime green off white vinyl top. 658-6314.

May we serve you?
Flowers
Candy
Fruit
Gifts
FTD
WESTON'S GREENHOUSES
9 Auburn St., Reading
944 - 0091

DON MERRILL
Echo Glen
Gen'l Contracting
PAINTING
CARPENTRY
ROOFING
MASONRY WORK
CONGRESS ST.
WILMINGTON MA.
658-9830

BEAUTY LOUNGE
NORTH WILMINGTON PLAZA
658 - 9332
9 - 6 Tues., Wed. Sat.
9 - 9 Thurs. & Fri.
We service & sell wiglets
Reasonable
All types of beauty service

GEORGE G. ROBERTIE
Locksmith 658 - 2206
KEYS - LOCKS
AUTO - HOME - INDUSTRIAL

BULLDOZING SHOVELDOZING
Loam Excavating
Sand Gravel
DELOURY CONSTRUCTION
475-7544

TAX RETURNS PREPARED
FEDERAL - STATE
INDIVIDUAL – PARTNERSHIPS – SMALL BUSINESS
SERVICES: ACCOUNTING, REAL ESTATE MANAGEMENT, PAYROLL, BILLINGS
PERSONAL - CONFIDENTIAL
BANKAMERICARD, MASTER CHARGE
MR. O'SHEA
944 - 6626
SERVING: WILMINGTON, TEWKSBURY, BILLERICA, BURLINGTON, READING

A & M Fenton Real Estate
Buying or Selling
Call Us!
REALTORS
MULTIPLE LISTING SERVICE
MLS
658 - 3221 944 - 6457

NEED ELECTRICIAN ?
HOUSE WIRING
REPAIRS
CALL
657 - 7752
Licensed

Learn to
DRIVE
the easy proven way
FREE! Valuable 36 page "Safe Driving Manual" details how to get your permits, exams, etc. Call or write for your copy ... no obligation.
Nervous? Unsure? You need NEIDE! We've been approved by NEIDE (New England Institute for Driver Education). That means we're professionals at helping you become a safe, sure driver. It means we meet their standards of competence and integrity too! Stop by or call us today ... be driving safely in a few days!
TRI TOWN DRIVING SCHOOL, INC.
NEIDE 944-1818 READING
Member New England Institute for DRIVER EDUCATION

CHARLIE'S AUTO BODY
611 MAIN ST.
WILMINGTON
Frame Straightening
Major Collision Work
Windshields
Fiberglas Bodies
Wrecker Service
658 - 5360

KENNY'S
Car & Scrap
REMOVAL
Metals Purchased
658-9533
or 438-6364

JOSEPH P SERAFINI
Licensed
CARPENTER & BUILDER
Specializing in ARISTOKRAFT
Custom Kitchens
Playrooms, bathrooms & additions
Call
658-9822

LOAM
CALL
475-7544
DELOURY CONSTRUCTION

JUNK CARS REMOVED FREE
AL'S AUTO PARTS
CHARLIE DUFFY
Call after 3 p.m.
658-4282

TAX RETURNS
Prepared by a former government examiner
- Individual
- Small Business
- Partnerships
- Bookkeeping
- Your Home or Mine
FRED BRACK
658 - 4613

KNOLLWOOD FARM DAIRY
319 Andover St., North Wilmington, Mass.
DAIRY PRODUCTS 658-4793
HOME DELIVERY M.C. EATON

ATTENTION Home Owners
Is Your Chimney Showing Your Costly Contribution To Air Pollution?
This is a
TRC
Clean Air Reminder

REAL ESTATE & INSURANCE
For the Best in Real Estate
CALL *the Poloian's*
LISTINGS NEEDED
WE HAVE CUSTOMERS WAITING
657 - 7028 658 - 2845

JOHN F. GLEASON
insurance agency
Complete Insurance Service
Fire, Life, Casualty, Surety
1764 Main Street Tewksbury
851-2241

IF YOU DRINK WHEN YOU DON'T WANT TO THAT'S OUR BUSINESS
ALCOHOLICS ANONYMOUS
Write to
2 Laurie Road, Tewksbury

For Delivery Of
Boston Globe
AM - PM - Sun.
Record American
AM and Sun.
Call 658-8211

Hot Line
24 Hours a Day!
457-7528
Call - or Walk In
Information, Counselling
Confrontation Group
Drug Identification
944-7140
Only on Fri. & Sat. from 6 p.m. to 2 a.m.
Anabasis House
841 Merrimack St.
Lowell
8 am - 10 pm
459-2761
Wilmington Drug Committee

D & S ELECTRIC
LICENSED ELECTRICIANS
INDUSTRIAL - RESIDENTIAL
Commercial
658-2668

JAMES H. WHITE Jr.
658-3141
CARPENTER
Remodeling & New Work
Interior Finish

WRIGHT ELECTRIC CO.
ELECTRICAL CONTRACTORS
INDUSTRIAL - COMMERCIAL - RESIDENTIAL
WILMINGTON 657 - 7195

Cesspools & Septic Tanks
Pumped out
LOAM
5 Yard Minimum
$20.60 Tax included per load
Back Hoes & Shovel Dozers FOR RENT
JOSEPH H APP
933 - 1077 Wilmington 658 - 2223

LICENSED
ELECTRICIAN
JOSEPH A. YOUNIS
Free Estimates
944 - 7042

'EXPERT'
PLASTERING
JOHN ARVANITIS
Repair & New Work
Free Estimates 658 - 4396

SHAWSHEEN PLUMBING & HEATING CORP.
NEW REMODELING REPAIRS
ALBERT A. SALERA
MASS. LIC. 6811 658-6118

GARAGES
GAS STATIONS
MASONRY
ONE STORY BUILDINGS
APARTMENTS
REMODELING
SODERHOLM CONSTRUCTION CO., INC.
General Contracting
180 TAFT RD., WILMINGTON, MASS.
KEN SODERHOLM
JAMES MURRAY
Residence 658-2787
Office 658-8468

ROCKPORT FISH MARKET
169 Haven St. Reading 944-0076
STORE HOURS:
FRESH FISH COUNTER 9 AM - 6 PM
RESTAURANT & TAKE-OUT SERVICE 9 AM - 7 PM

MORTGAGEE'S SALE OF REAL ESTATE

By virtue and in execution of the power of sale contained in a certain mortgage given by **William C Cawthron, a k a William Campbell Cawthron** and **Valeria M Cawthron** of N. Wilmington, County of Middlesex, Massachusetts to **Allen B Schwartz** of Boston, said mortgage dated May 23, 1969 and recorded with No Middlesex Registry of Deeds Book 1886 Page 61 and by authority of the Decree of the Land Court March 7, 1972 case number 64307 in Equity, for breach of the conditions of said mortgage and for the purpose of foreclosing the same will be sold at Public Auction at 10:00 A. M. on the 12th day of April 1972 on the premises at 8 Pilling Street No. Wilmington Massachusetts, being the same premises conveyed by and more particularly described in deed from Albert P. Rounds et al to William C Cawthron a k a William Campbell Cawthron and Valeria M Cawthron dated September 7, 1955, recorded in Middlesex County Registry of Deeds Book 1307 Page 463.

Subject to a prior mortgage to the Provident Institution for Savings, the original amount of which was $12,000.00. Subject to municipal tax titles and all municipal liens, unpaid taxes, unpaid water bills and any other prior encumbrances or liens thereon if any there be.

TERMS OF SALE

FIVE HUNDRED ($500.00) dollars in cash, certified check or bank check will be required by the purchaser at the time and place of sale and the balance in cash, certified check or bank check to be paid ten days thereafter at the time of delivery of Deed at the office of Ralph Davis, Esq. 73 Tremont St. Boston, Mass. Other terms to be announced at the time and place of sale.

ALLEN B. SCHWARTZ of Boston present holder of said mortgage

RALPH DAVIS, Attorney for mortgagee, 73 Tremont Street, Boston, Massachusetts 02108

M16.23.30

MORTGAGEE'S SALE OF REAL ESTATE

By virtue and in execution of the **POWER OF SALE** contained in a certain mortgage given by **William F. Hart** and **Hilda M. Hart** to **Lynn Institution for Savings** dated October 27, 1969 and recorded with Middlesex North District Registry of Deeds Book 1904, Page 285, of which mortgage the undersigned is the present holder, for breach of the conditions of said mortgage and for the purpose of foreclosing the same will be sold at Public Auction at three o'clock P. M. on the seventeenth day of April A. D. 1972, 60 Brand Avenue, Wilmington, Middlesex County, Massachusetts all and singular the premises described in said mortgage.

To wit: A certain parcel of land with all the buildings and structures now or hereafter standing or placed thereon, situated in Wilmington, in the County of Middlesex and Commonwealth of Massachusetts, bounded and described as follows:

NORTHEASTERLY by Brand Avenue, 150 feet; SOUTHEASTERLY by Lot 61 as shown on a plan hereinafter mentioned, 130 feet; SOUTHWESTERLY by land now or formerly of the B & M Railroad, 150 feet; and NORTHWESTERLY by Lot 68 as shown on said plan, 130 feet.

Being Lots 162-167 inclusive as shown on a plan entitled, "Plan of Silver Lake Addition, Wilmington, Mass., dated September 1920 and recorded with Middlesex North District Registry of Deeds Plan Book 42, Plan 73.

Being the same premises conveyed to us by Mary M. Ruggiero by deed to be recorded herewith.

The mortgagors acknowledge that the within mortgage is a first mortgage given to secure payment of a loan made to them by Lynn Institution for Savings to finance their acquisition of a dwelling in which they expect to reside, within the meaning of Regulation Z, Sec. 226.9 (g) (1).

Said premises will be sold subject to unpaid taxes and tax titles, if any.

Terms of Sale: $1,000.00 in cash at the time and place of the sale and the balance in ten days.

Other terms to be announced at the sale.

Signed LYNN INSTITUTION FOR SAVINGS
March 16, 1972 By Charles E. Cain, Treasurer
M23.30A6 Present holder of said mortgage

COMMONWEALTH OF MASSACHUSETTS LAND COURT

34874 Reg.

To the **Commonwealth of Massachusetts**; To the **City of Woburn**, a municipal corporation located in the County of Middlesex and said Commonwealth; To the **Town of Wilmington**, a municipal corporation located in the County of Middlesex and said Commonwealth; **Henry R. Cooper**, Trustee, **P. Terrell**, Trustee, and **Clifford H. Hupper**, all of said Wilmington; **Henry R. Mastromarino** and **Joseph P. Mastromarino, Jr.**, both of Revere, in the County of Suffolk and said Commonwealth; **Virginia C. Tocci, Trustee and Lawrence Tocci**, Trustee, both of Waltham, in the County of Middlesex and said Commonwealth; **Rodger P. Nordblom, Robert C. Nordblom, Russell Fogelin**, all Trustees of the **Nordbloom Company**, or their heirs, devisees or legal representatives; **Rocco Zoppo**, of Boston, in the County of Suffolk and said Commonwealth; **Commodity Warehouse Corp.**, a duly existing corporation having an usual place of business in said Wilmington; **The National Shawmut Bank of Boston**, a duly existing corporation; **Provident Institution for Savings**, a duly existing corporation having an usual place of business in Boston; **Nordbloom Company**, a duly existing corporation having an usual place of business in said Boston; **Don's Gradall Service, Inc.**, a duly existing corporation having an usual place of business in said Wilmington; **Bradford Associates**, of said Boston; **Smithcraft Corporation**, a duly existing corporation having an usual place of business in said Wilmington; **Usen Canning Co.**, a duly existing corporation having an usual place of business in said Woburn; **Realty Construction of N. E. Inc.**, a duly existing corporation having an usual place of business in said Woburn; **L. T. V. Ling Altrec**, a duly existing corporation having an usual place of business in said Wilmington; **Woburn Processing Co., Inc.**, a duly existing corporation having an usual place of business in said Woburn; **Genuine Parts Co. of Atlanta Georgia**, a duly existing corporation having an usual place of business in Atlanta, in the State of Georgia; **General Electric Company**, a duly existing corporation having an usual place of business in Newton, in said County of Middlesex; **Florence Balkus**, or heirs, devisees or legal representatives; and **Francis Spear**, or his heirs, devisees or legal representatives; and to all whom it may concern.

Whereas, a petition has been presented to said Court by **I. Fred DiCenso**, of Quincy, in the County of Norfolk and said Commonwealth and **Carlo B. DiCenso**, of Braintree, in said County of Norfolk, to confirm their title in the following described land:

A certain parcel of land with the buildings thereon situate partly in said Woburn and partly in said Wilmington, bounded and described as follows:

Westerly by Woburn Street 767.41 feet; Northerly by land now or formerly of Lawrence Tocci, Trustee and Virginia C. Tocci, Trustee 57 feet, 89 feet, 180.12 feet, 66.30 feet, 42.98 feet, 49.97 feet, 54.79 feet, and 85.33 feet respectively; Westerly by land now or formerly of Lawrence Tocci, Trustee and Virginia C. Tocci, Trustee 562.63 feet, 53.42 feet, 81.72 feet, and 187.12 feet respectively; Northerly by land now or formerly of Harry E. Cooper and P. Terrell, Trustees, by land now or formerly of Henry R. Mastromarino and Joseph P. Mastromarino Jr. and by land now or formerly of I. Fred DiCenso and Carlo B. DiCenso 93.69 feet, 387.73 feet, 488.06 feet, 235 feet, 104.90 feet, and 446.80 feet respectively; Easterly and Northerly by land now or formerly of I. Fred DiCenso and Carlo B. DiCenso 377.50 feet, and 700.92 feet respectively; Easterly and Northerly by land now or formerly of I. Fred DiCenso and Carlo B. DiCenso 108 feet and 466.16 feet respectively; Easterly by the Westerly line of Interstate Highway Route No. 93, 218.97 feet and 366.12 feet respectively; Southerly and Southeasterly by land now or formerly of Realty Construction of New England Inc. 122.06 feet, 572.59 feet and 572.11 feet respectively; Southerly and Easterly by land now or formerly of Realty Construction of New England Inc. 304.51 feet and 86.24 feet respectively; Southeasterly by land now or formerly of Woburn Processing Co. Inc. and by land now or formerly of Usen Canning Co. 1888.03 feet.

The above-described land is shown on a plan filed with said petition and all boundary lines are claimed to be located on the ground as shown on said plan.

If you desire to make any objection or defense to said petition you or your attorney must file a written appearance and an answer under oath, setting forth clearly and specifically your objections or defense to each part of said petition, in the office of the Recorder of said Court in Boston (at the Court House), on or before the twenty-fourth day of April next.

Unless an appearance is so filed by or for you, your default will be recorded, the said petition will be taken as confessed and you will be forever barred from contesting said petition or any decree entered thereon.

Witness, WILLIAM I. RANDALL, Esquire, Judge of said Court, this seventh day of March in the year nineteen hundred and seventy-two.

Attest with Seal of said Court.

SEAL MARGARET M. DALY, Recorder

Jordan Ring, Atty. 89 State St. Boston, Mass.

M16.23.30

COMMONWEALTH OF MASSACHUSETTS SHERIFF'S SALE

Middlesex, ss. Lowell, May 3, 1971

Taken on execution and will be sold by public auction on the 21st day of April, 1972 on Friday at 11:30 o'clock A.M. at the SHERIFF'S OFFICE, 150 Warren Street, Lowell, County of Middlesex, Massachusetts, all the right, title and interest that **Judson L. Bowers, Jr.** 86 Lowell Street, Wilmington, County of Middlesex, had (not exempt by law from levy on execution or from attachment) on the third day of May, 1971 being the time when the same was seized on execution in and to the following described real estate, to wit: - Book 1814 Page 578.

The land in Wilmington, Middlesex County, Massachusetts, with the buildings thereon, being shown as Lots 1, 2, 3, and 4 in the first range on the plan entitled "Plan of 40 Building Lots of France B. Hiller, in the Southerly Part of Wilmington, Middlesex County, Mass. Laid out by S. F. Thompson, C. E. Woburn, 1868 and 1874," recorded with Middlesex North District Registry of Deeds Book of Plans 3-C, Plan 137, bounded and described as follows:

SOUTHERLY by Lowell Street (formerly called Salem Road) five (5) rods; WESTERLY by land now or formerly of Sheldon, as shown on said plan, sixteen (16) rods; NORTHERLY by Lot No 5, as shown on said plan, five (5) rods; and EASTERLY by a private way or street as shown on said plan as Commonwealth Avenue, sixteen (16) rods.

Said premises are hereby conveyed together with the right, at all times, to use said private way or street as shown on said plan, for all proper uses of a street or passageway in common with others having the same right, but not to obstruct the same and subject to all conditions or restrictions of record, so far as the same are now in force and applicable.

Terms of sale-Cash

LEO L. TRUDEL, DEPUTY SHERIFF

M16.23.30

COMMONWEALTH OF MASSACHUSETTS SHERIFF'S SALE

Middlesex, ss. Lowell, December 13, 1972

Taken on execution and will be sold by public auction on the 14th day of April, 1972 on Friday at 10:30 o'clock A. M. at the SHERIFF'S OFFICE, 150 Warren Street, Lowell, County of Middlesex, Massachusetts, all the right, title and interest that **Walter Bahia**, 48 Marcia Road, Wilmington, County of Middlesex, had (not exempt by law from levy on execution or from attachment) on the 29th day of April, 1971 at 9:00 o'clock A. M. Recorded in Book 1956 Page 0617 being the time when the same was Specially Attached in and to the following described real estate, to wit: - Book 1804, Page 471.

A certain parcel of land with the buildings thereon in Wilmington, Middlesex County, Massachusetts and being shown as lot 10 on a plan entitled "DeCarolis Estates - Plan of Land in Wilmington, Massachusetts, January 21, 1964 - Dana F. Perkins & Sons, Inc. - Engineers and Surveyors, Lowell, Mass." Further bounded and described as follows:

Easterly By Marcia Road 100.75 feet; Northerly By 106.11 as shown on said plan 180.49 feet; Westerly By land now or formerly of William D. and Norma Hanson and Frank H. & Mary E. Cummings 125.75 feet; Southerly By Carolyn Road as shown on said plan 156.46 feet; and Southwesterly By a curved line having a radius of 25 feet by said Carolyn Road and Marcia Road 39.27 feet.

Contains according to said plan 22,623 square feet more or less.

Terms of sale - cash

LEO L. TRUDEL, DEPUTY SHERIFF

M9.16.23

MORTGAGEES SALE OF REAL ESTATE

By virtue and in execution of the power [illegible] contained in a certain mortgage given by [illegible] **D. Cook** and **Patricia A. Cook**, dated [illegible] 1970 to **Robert C. Haufler**, recorded [illegible] North District Deeds Book 1911 Page [illegible] mortgage the undersigned is the present [illegible] breach of the conditions in the said [illegible] tained and for the purpose of foreclosing [illegible] be sold at Public Auction on the premises [illegible] after described on April 7, 1972 at [illegible] the forenoon all and singular premises [illegible] in said mortgage as follows:

A certain parcel of land with the buildings [illegible] known and numbered as Three Wilton [illegible] mington, Middlesex County, and being [illegible] Lot 6 on a plan entitled "Subdivision [illegible] Wilmington, Mass. owner F & H B[illegible] Medford, Mass." dated June 24, 19[illegible] Canon, Surveyor and Civil Engineer [illegible] with Middlesex North District Deeds [illegible] 89, Plan 46, being bounded and [illegible] follows:

NORTHWESTERLY by Wilton D[illegible] dred (200) feet; NORTHEASTERLY [illegible] and 4 on said plan by three lines [illegible] uring two hundred eighty-seven, 28[illegible] erly by said Lot 4 two hundred [illegible] 55/100 (243.55) feet; SOUTHWESTERLY [illegible] 7 on said plan four hundred twenty [illegible] feet.

Containing 80,960 feet of land.

Said premises will be sold subject [illegible] unpaid taxes, assessments, betterments [illegible] cipal liens, if any there be.

TERMS: One Thousand ($1,000) [illegible] or certified check at the time of [illegible] other terms to be announced at the [illegible] sale.

[illegible]

M16.23.30

COMMONWEALTH OF MASSACHUSETTS PROBATE COURT

Middlesex, ss.

To all persons interested in the estate of **Theresa G. Laskey** late of Wilmington in said County, deceased.

A petition has been presented to said Court for probate of a certain instrument purporting to be the last will of said deceased by **Alfred J. Medaglia** of Somerville in the County of Middlesex praying that he be appointed executor thereof without giving a surety on his bond.

If you desire to object thereto you or your attorney should file a written appearance in said Court at Cambridge before ten o'clock in the forenoon on the twenty-first day of April 1972, the return day of this citation.

Witness, William E. Hayes, Esquire, First Judge of said Court, this seventeenth day of March 1972.

John V. Harvey, Register

M23.30A6

COMMONWEALTH OF MASSACHUSETTS PROBATE COURT

Middlesex, ss.

To all persons interested in the trust estate under the will of **Harriet V. Jopp** late of Wilmington in said County, deceased, for the benefit of **Ruth Junkins Jopp**.

The trustees of said estate have presented to said Court for allowance their fifth to ninth accounts inclusive.

If you desire to object thereto you or your attorney should file a written appearance in said Court at Cambridge before ten o'clock in the forenoon on the eighth day of May 1972, the return day of this citation.

Witness, William E. Hays, Esquire, First Judge of said Court, this fourteenth day of March 1972.

John V. Harvey, Register

M23.30A6

COMMONWEALTH OF MASSACHUSETTS PROBATE COURT

Middlesex, ss.

To all persons interested in the estate of **John D. Elliott** late of Wilmington in said County, deceased.

The first account of the administrat[illegible] will annexed as rendered by the [illegible] with the will annexed of the estate [illegible] ministered has been presented [illegible] allowance.

If you desire to object thereto you [illegible] ney should file a written appearance [illegible] at Cambridge before ten o'clock in the forenoon on the first day of May 1972, the return day of this citation.

Witness, William E. Hays, Esquire, First Judge of said Court, this fourteenth day of March 1972.

John V. Harvey, Register

M23.30A6

TOWN OF WILMINGTON MASSACHUSETTS OFFICE OF THE TOWN CLERK

LAST DAY TO REGISTER VOTERS FOR THE PRESIDENTIAL PRIMARIES

The Board of Registrars will be in session at the Town Hall to register voters for the April 25, 1972 PRESIDENTIAL PRIMARIES on Saturday, from NOON to 10:00 P. M. ...... MARCH 25, 1972.

F Talbot Emery, Chairman
M16,23 BOARD OF REGISTRARS

LOST BANK BOOK: The following bankbook is lost and application has been made for payment of the amount in accordance with Sec. 20, Ch. 167GL. Payment has been stopped. Bankbook 1706 Commercial Bank&Trust. M233t.

COMMONWEALTH OF MASSACHUSETTS PROBATE COURT

Middlesex, ss.

To all persons interested in the estate of **Elvira V. Ljunggren**, late of Wilmington in said County, deceased.

A petition has been presented to said Court for probate of a certain instrument purporting to be the last will of said deceased by **William O. Ljunggren** of Wilmington in the county of Middlesex praying that he be appointed executor thereof without giving a surety on his bond.

If you desire to object thereto you or your attorney should file a written appearance in said Court at Cambridge before ten o'clock in the forenoon on the twenty-ninth day of March, 1972, the return day of this citation.

Witness, William E. Hays, First Judge of said Court, this twenty-ninth day of February, 1972.

John V. Harvey, Register

M9.16.23

COMMONWEALTH OF MASSACHUSETTS SHERIFF'S SALE

Middlesex, ss. Lowell, January 7, 1972

Taken on execution and will be sold by public auction on the 21st day of April, 1972 on Friday at 10:30 o'clock A. M. at the SHERIFF'S OFFICE, 150 Warren Street, Lowell, County of Middlesex, Massachusetts, all the right, title and interest that **Robert M. Young** and **Karla Young**, both of Crescent Street, Wilmington, County of Middlesex, had (not exempt by law from levy on execution, or from attachment) on the 7th day of January, 1972, being the time when the same was seized on execution in and to the following described real estate, to wit: - Book 1952, Page 450.

A certain parcel of land with the buildings thereon situated in Wilmington, Middlesex County, Massachusetts and being shown as Lots 148, 149, 150 and 151 on a plan entitled "Silver Lake Gardens, Wilmington, Mass., owned by J. W. Wilbur Co. Inc." dated August 22, 1918, Chas. J. Elliot, Surveyor, recorded with Middlesex North District Deeds, Plan Book 35, Plan 42, said lots together bounded and described as follows:

SOUTHEASTERLY by Crescent Street, 120 feet; SOUTHWESTERLY by Lot 147 on said plan 100 feet; NORTHWESTERLY by Lots 116, 115, 114 and 113 on said plan 120 feet; and NORTHEASTERLY by Lot 152 on said plan 100 feet.

Containing 12,000 square feet according to said plan.

Terms of sale-Cash

LEO L. TRUDEL, DEPUTY SHERIFF

M16.23.30

TOWN OF WILMINGTON

BOARD OF APPEALS PUBLIC HEARING 9-72

A public hearing will be held at the Town Hall Annex, 150 Middlesex Avenue on Tuesday evening, April 11, 1972 at 8:00 p. m. on the application of Lucci's Realty Trust, 211 Lowell Street (Melrose-Wakefield Trust, Lessee) for a variance to erect a sign on a lot at 211 Lowell Street (Assessor's Map 57-53) within the required front yard.

Robert E. Jennings
M23.30 Board of Appeals

BOARD OF APPEALS PUBLIC HEARING 10-72

A public hearing will be held at the Town Hall Annex, 150 Middlesex Avenue on Tuesday evening, April 11, 1972 at 8:00 p. m. on the application of William & Paula Elliott, 155 Shawsheen Avenue for a variance to maintain a three-family dwelling on a lot at 12 Silver Lake Avenue (Assessor's Map 55-206).

Robert E. Jennings
M23.30 Board of Appeals

BOARD OF APPEALS PUBLIC HEARING 11-72

A public hearing will be held at the Town Hall Annex, 150 Middlesex Avenue on Tuesday evening, April 11, 1972 at 8:00 p. m. on the application of William J. Frey et ux, 46 Middlesex Avenue for a variance to convert a barn to additional living space on a lot at 46 Middlesex Avenue (Assessor's Map 42-36).

Robert E. Jennings
M23.30 Board of Appeals

BOARD OF APPEALS PUBLIC HEARING 12-72

A public hearing will be held at the Town Hall Annex, 150 Middlesex Avenue on Tuesday evening, April 11, 1972 at 8:00 p. m. on the application of Victor M. Okolo, 3 Pleasant Street for a variance to erect a roof over patio on a lot at 3 Pleasant St. (Assessor's Map 88-84) within the required rear yard.

Robert E. Jennings
M23.30 Board of Appeals

COMMONWEALTH OF MASSACHUSETTS PROBATE COURT

Middlesex, ss.

To all persons interested in **Charles K Ryder, Third** of Wilmington in said County, minor.

A petition has been presented to said Court, praying that **Norman C Thatcher** of Wilmington in the County of Middlesex or some other suitable person, be appointed his guardian of the estate of said minor.

If you desire to object thereto you or your attorney should file a written appearance in said Court at Cambridge before ten o'clock in the forenoon on the seventh day of April 1972, the return day of this citation.

Witness, William E. Hays, Esquire, First Judge of said Court, this seventh day of March 1972.

John V. Harvey, Register

M16.23.30

Hoop tourney finale this Weekend

OLYMPIAN'S RICK BALLOU AND WARRIOR'S TOM STEWART: Tap off in last Friday's Warrior-Olympians clash at the West Intermediate Gym. The Warriors went on to crush the Olympians, 42-19 to move on to the Intermediate final tomorrow night at the High School.

The 2nd Annual Wilmington Invitational Basketball Tourney moves into the final round with championship games in five divisions beginning tomorrow evening and concluding on Saturday night at the High School Gym.

Last week in the boy's junior semi-final contest, Jim Maxwell's Mustangs ripped Doug Smith's junior Super-Stars, 45-26. Dave Maloney took game scoring honors tossing in 15 points for the winners, while Dan Burns and Ed Maloney chipped in with 8 apiece. Bob Frangillo scored 10 for the losers. Saturday the Mustangs will battle the All-Stars for the junior crown.

In the boy's senior division, the favored Celtics and Hackers won with relative ease, setting the stage for their final on Saturday night. On March 15th the Celtics jumped out to an 18-0 first period lead and were never challanged enroute to a 70-26 thrashing of the Rangers. Phil Morrissey (20 points) and Steve Daniell (11) led a well balanced attack. Rich Allen was the lone offensive threat for the losers tossing in 11 points.

Stan Riley's defending champion Hackers exploded for 20 second period points to break open a close ball game, 9-8 after the first period, and went on to rout Googy's Good Guys, 68-35. Pat Simmons and Mark Nelson tossed in 25 and 24 points respectively for the Hackers, while Joe Scifo scored 17 for Googy's.

The Wildcats belted Stan's Kids, 44-26 behind Tom Marden's 13 points and the Warriors topped the Olympians, 42-19 with Jim Stewart leading the way scoring 12, thus setting the stage for the Intermediate finals Friday night at the High School.

In the Adult loop, Newhouse moved into tonight's semi-final clash with Avco by posting a 72-57 win over the Circuit Riders last week. Avco advanced to the semi's with an exciting 69-55 triumph over Deloury on Tuesday evening. Dave Orndorff (25), Jim Maxwell (20) and Don Bailey (19) led Dave Newhouse's quintet to its quarter final win. Cliff Clark tossed in 19 for the Riders, while Bill Jensen chipped in with 17.

Avco won its contest with Deloury, outscoring George Hanna's squad 23-15 from the charity stripe. Bob Dziadosz was outstanding for the winners, tossing in 39 points, 17 of which came on free throws as he connected on 11 of 13 tries in the all important final period. Deloury trailed 46-40 entering the last stanza, but were unable to convert on their scoring chances, especially on free throws, making only three of seven attempts.

Wilmac earned the right to battle Super-Stars in a key semi-final clash tomorrow night with a 96-42 triumph over the Golden Ones Tuesday evening. Keith Anderson (22) and Gino DiSarcina (21) led a well balanced scoring attack as all five starters hit for double figures. Len Gustus was the lone offensive threat for the Golden Boys, tossing in 18 points.

REMAINING PLAYOFFS

Tonight: Newhouse vs Avco (7:30 pm at West Intermediate).

Friday: Intermediate Final, Wildcats vs Warriors, 7 pm in the High School Gym; Adult semi-final, Super-Stars vs Wilmac, 8:30 pm in the High School Gym)

Saturday: All finals: Juniors, All-Stars vs Mustangs (4:30 pm); Senior girls, Rangers vs Deserters (5:30 pm); Senior boys, Celtics vs Hackers (7 pm); Adults, (8:30 pm).

How They Stand

Adult Hockey - No Check (Final 2nd half)	
Aces	9-6-2
Blues	8-7-2
Flyers	6-8-3
Jets	7-9-1
Youth Hockey - Intermural League	
Bantam Division	
Bruins	7-3-0
Red Wings	5-5-0
Rangers	4-5-1
Canadiens	3-6-1
Pee Wee Division	
North Stars	5-1-1
Blues	5-1-0
Kings	4-3-0
Seals	4-3-0
Penquins	1-4-1
Flyers	0-7-0
Squirt Division	
Bears	7-1-2
Aces	6-2-2
Reds	5-3-2
Voyageurs	5-3-2
Braves	3-4-3
Americans	2-5-3
Clippers	2-7-1
Barons	1-6-3
Sprite - Eastern Division	
Blazers	7-0-3
Rockets	4-3-3
Checkers	3-4-3
Blades	0-7-3

Bowling

NO. WILMINGTON MERCHANTS

No. Wilm. Pharmacy	50-30
Ceasar Aluminum	44-36
Mytron	44-36
Total Insurance	44-36
Chempro	40-40
Coombs	40-40
American Traveler	38-42
Pineridge Cleaners	34-46
Jaycees	33-47
Stop & Go	33-47

High Singles: Art Griffin, 224; Cliff Knight, 218; Phil DeSanto, 209; Edna Berger, 187; Blanche Hogan, 179 and Blanche Hogan, 172.

High Series: Phil DeSanto, 566; Cliff Knight, 561; Art Griffin, 560; Blanche Hogan, 511; Pat Cook, 482 and Anne McDonough, 460.

AwardWinner

JIM AND RUTH MCFARLAND: Of Jamesway Studio, recently returned from the Massachusetts Professional Photographers Annual Convention Jim is shown above with his award winning portraits.

At the recent Annual Convention of Massachusetts Professional Photographers, Jim McFarland of Wilmington's Jamesway Studio was selected from among a number of applicants to be the recipient of a full tuition-paid scholarship to the New England Institute of Professional Photography, held at the New England Center for Continuing Education, University of N. H.

He was also re-elected to the position of Corresponding Secretary on the Executive Board of the Professional Photographers Association of Massachusetts.

The convention, held at the Yankee Drummer Inn in Auburn, drew over 200 professional photographers from all over New England.

DRAMA CLUB TO ENTER STATE DRAMA FESTIVAL

On Saturday, March 25th, the Wilmington High School Drama Club will participate in the finals of the Massachusetts State Drama Festival. The club reached the finals by winning the regional festival in Chelmsford on March 11th.

The winning one-act play was entitled "Theatre of the Soul" an original drama written by Miss Carole Chipman, the club's advisor and a teacher at Wilmington High. Four students won individual awards for acting, including: Ray Dudley, Harold Walley, and Janice and Lorraine Spada.

The finals of the festival will be held at John Hancock Hall in Boston from 8 am to 11 pm. Wilmington will be competing against the other regional winners.

The public is cordially invited. Admission will be $1.00.

SOMEBODY STOLE SOME SUMP PUMPS

Why should anyone steal sump pumps in Wilmington?

Somebody did. The Misells family, of Federal Street reported that two pumps, worth several hundred dollars, were stolen from their cellar, on March 19th.

LOTS OF BEANS: The Wilmington Swordsmen, Drum and Bugle Corps, had prepared a bean supper, in the Grange Hall, for the voters at the Town Meeting. When the voters carried the Town Meeting right through to a finish there were an awful lot of beans left over, even though 55 persons did show up to partake.

Bob Mulkern, the Manager is assisted by his daughter Jan, who is Flag Bearer, and his son Bob Junior, a drummer.

CLASS OF 32, SOMERVILLE HS PLANS 40TH REUNION

The Class of 1932, Somerville High School has formulated plans for their 40th Reunion to be held on May 5th at the Montvale Plaza, Montvale Avenue, Stoneham.

Class officers have, with difficulty traced about one-third of their class and would most assuredly like to contact more than that.

Inquiries regarding this Gala Event should be addressed to Eleanor Osgood Freeman, Secretary for the Committee at 520-B High Street, West Medford.

SAVE $$$$ COUPON
STARLITE CAR WASH
NO. READING
RT. 28 / RT. 62
107 MAIN ST.
664-4792

OPEN MON. - SAT., 9 - 6, SUN. 9 - 1
NEW OWNERS INTRODUCTORY $1
Automatic Exterior Wash & Wax
Protect the Paint — Hot Wax 0.25
Self Service — Vacuum 0.10
MY POLICY
is to serve you in a prompt and courteous manner and present you with a SPARKLING CLEAN CAR by personally maintaining the VERY BEST in Car Wash equipment.
I hope this policy will make you, the customer, a satisfied one.
Always at your service,
Karl Mueller.
Valid during March and April with this Ad.

Trucking — Loam-Gravel Sand-Fill — Backhoe Work
GEORGE E. FROTTON TRUCKING CO., INC.
180 MAIN ST. Res-658-9548 Gar-664-8592 WILMINGTON

You will find it at
KING'S JEWELRY and GIFT SHOP
Praying Hands Charm
A truly lovely gift for Easter and all year long.

This Sterling Silver Disc Charm Priced at $3.50
Also Available in Gold filled, $3.50
In The Wilmington Plaza 658-2122
Expert Watch Repair and Engraving

You Can Keep Your Savings On a Rainy Day, and Stay Dry, Too.
See Page 9

296 SHAWSHEEN AVENUE
ACROSS FROM THE SHAWSHEEN SCHOOL
All the Service & Convenience of a Small Store, Combined with SUPERMARKET PRICES
MILK GAL. 99¢
FRESH VEGETABLES & FRUIT
FRESH DONUTS DAILY
FROZEN FOODS
WE ARE AGENTS FOR THE GAME MASSACHUSETTS STATE LOTTERY
Come-Visit Our Deli Dept
Specializing in Italian Cold Cuts

JAY'S of No. Reading
24 MAIN ST. Rt 28
Sales & Service
Zenith, Kelvinator, RCA — Fedders, Whirlpool, Maytag
Discount Prices
J. McCabe, Mass. Lic. #4417
944-9333

MARION T MURPHY
943 Main Street
REAL ESTATE
RESIDENTIAL-COMMERCIAL-INDUSTRIAL
658 - 3581

Warren Mickie
FLOORS
ARMSTRONG VINYL & LINOLEUM
CARPET FOR PORCHES
VIKING CARPETS FOR KITCHENS
FORMICA COUNTER TOPS
CERAMIC TILE
CALL 658 - 9503

RALPH'S AUTO BODY
Ralph Kinnear, Jr., Prop.
Auto Painting
Frame Straightening
Wrecks Rebuilt
Body & Fender Repairs
Customizing
Corvettes
Glass Work
Insurance Estimates
SUPER-FAST SERVICE
933-9836 933-0024
17 N. MAPLE ST.
NORTH WOBURN
No. Woburn Industrial Park
SHOP HOURS: 7:30 - 6:30

CHANTILLY CREAM SACHET
Reg. $3.50 - Now Only $2.50
CHANTILLY HAND & BODY LOTION
17 oz. $5 Value - Now $2.50
PRINCE MATCHABELLI
Hand & Body Lotion
$4 Value - Special $1.95

Russell Stover CANDIES
Easter Chocolates

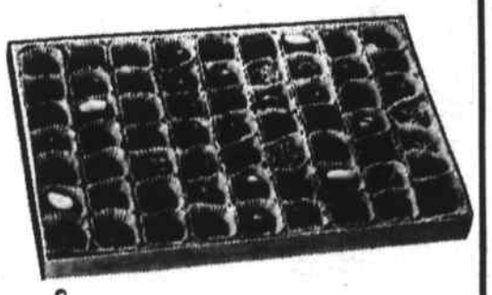

Our Every Day Low Prices

5 oz Phisohex	Reg. 1.60	Our Price 1.29
100 Bufferin	Reg. 1.59	Our Price 1.19
Vicks NyQuil	Reg. 1.59	Our Price 1.29
Nice & Easy	Reg. 2.25	Our Price 1.75
17 oz Scope	Reg. 1.59	Our Price 1.27
Playtex Disposable Bottles	Reg. 1.19	Our Price .89¢
Johnson's Baby Powder	Reg. 1.29	Our Price 1.03
6 oz Vicks Formula 44	Reg. 1.98	Our Price 1.58
10 Contac	Reg. 1.69	Our Price 1.35

WILMINGTON PLAZA DRUG
658-3377

Bone In CHUCK POT ROAST 77¢ LB.

BONELESS POT ROAST 89¢ LB.

LEAN SHORT RIBS WHILE THEY LAST 79¢ LB.

CHUCK STEAK or ARM STEAK 89¢ LB.

HAMBURG LEAN 79¢ LB.

ARMOUR STAR SELF BASTING TURKEYS 12 LB AVERAGE 49¢ LB.

BONELESS PORK ROAST BUY NOW FOR EASTER 79¢ LB.

KING SIZE TIDE SAVE 40¢ 1.19

ELIA'S
WILMINGTON'S FINEST MEAT
NORTH WILMINGTON CENTER

Top scouting honors for Evelyn Kaminski and Frank Tuttle

Frank Tuttle of Carson Avenue, and Mrs. Evelyn Kaminski of Fairmeadow Road were the surprised recipients of the top honors for adults, in Scouting, at the annual Awards Dinner of the Greater Lowell Council, Boy Scouts of America, last Saturday evening. The dinner was held in a Nashua N. H. restaurant.

Mrs. Kamiski was honored with the Silver Fawn, a relatively new award in Scouting. She was the first to receive it in the Greater Lowell Council. The Silver Fawn corresponds to the Silver Beaver award given to men who have devoted years of their time to Scouting.

Frank Tuttle of 2 Carson Avenue was given the Silver Beaver. Like the award given to Mrs. Kamiski, it was a total surprise.

Evelyn Kaminski has been in Scouting for 11 years. She was a Den Mother in January 1961 in Pack 56 of the Congregational Church, and she was instrumental in the organization of Pack 58 in St. Dorothy's Roman Catholic Church. In February 1969 she became a Den Leader Coach for the Pack and since then has earned the training award for that position. She has trained each and every Den Mother who has joined the Pack, at St. Dorothy's, since it was formed, and has guided the leaders with sound and practical advice.

In September 1971 Mrs. Kaminski became the Vice Chairman of the Wamesit District Training Committee, a position she still holds. She is an active member of her church, and is currently a church school teacher for the retarded and emotionally disturbed children of Wilmington. Her work is ecumenical in scope.

Mrs. Kaminski is also active in Girl Scouting, and is the leader of a Junior Girl Scout Troop in Wilmington. She has served the Wilmington Community Fund, and is a member of the Board of Directors of Camp Forty Acres.

The Roman Catholic Archdiocese of Boston has awarded her the Corrigan Medal for her efforts to promote the spiritual development of her Cub Scouts. She was the first Den Mother in Greater Lowell Council to have Cub Scouts earn the Parvuli Dei Medal, a Catholic Cubbing Award.

Her major contribution to the Council has been her help in training Den Mothers. Through the years she has taught what she has learned, in the training sessions, to others, so that they too could enjoy the Cubbing program as much as she does.

Her most personal contribution has been to support and encourage her husband and her three sons in their participation of Troop, District and Council activities. This support has been continuous. She has preferred that they be at summer camp, a scouting show, or other scouting activity serving others. Service to others has been a way of life to her.

Frank H. Tuttle has been in Scouting since 1951 when he joined the Pack 18 and Troop 164 Committees in Southbridge. These units were sponsored by the American Optical Company, where he was an engineer. He served as an Institutional Representative from 1951 to 1957. He was District Leadership and Training Chairman, from 1955 to 1957, and during this period served on the Worcester Council Executive Board. During the years 1951 to 1958 he completed Cub, Scout and Explorer basic training, and served as instructor in these courses. He took training at the Schiff Training Center four times during this period.

Mr. Tuttle transferred to the Greater Lowell Council in 1958, and has served since 1959 in the Wamesit District Council, and as a Merit Badge Counselor since 1960. He was on the Executive Council for the Greater Lowell Council from 1964 to 1968 and member-at-large.

Mr. Tuttle has served at many of the National Jamborees of the Boy Scouts of America. In 1964 he was the Chairman of the National Jamboree Committee, and was Scoutmaster for a Troop of 11 Scouts who journeyed to the Philmont Scout Ranch, in New Mexico in 1967.

At present he is the Secretary-Treasurer of Camp Forty Acres, in Wilmington, President of the Ipswich River Audubon Club, and is a Past Senior Deacon of the Congregational Church. He is a 48 year member of the Warren (Mass.) Grange, an instructor at the Ipswich Wild Life Sanctuary, a member of the Josselyn Botanical Society, the Audubon Society, the American Fern Society, the New England Wild Flower Society and the National Wildlife Federation. He has served with the Wilmington Community Fund and assisted in many other ways in the Town of Wilmington, and several years ago, Mr. Tuttle was the subject of a story in the Town Crier, concerning his collection of ferns from the Wilmington Town Park.

EASTER SEAL COFFEE DAY

Coffee Day to benefit crippled children and their camp program is an annual event of the Mass Easter Seal Society. It will be held this year on Thursday, March 30th.

It is a two-week special event that begins on Thursday, March 16th, when small red buttons go on sale in restaurants, coffee shops and snack bars throughout the state to benefit the Easter Seal campaign.

Buttons are sold for $1 and on March 30th, anyone who has a button may drink free coffee in any of the participating establishments.

For further information, call Mrs. Joseph Sadlow of Park St. North Reading.

MR. AND MRS. E. HAYWARD BLISS: Of Glen Road were among the approximately 200 guests of the Melrose-Wakefield Trust Company at a preview of their new Wilmington office, last night. At right are Ken Busher, manager, and James Kripp, vice president.

Below are Bob Leahy, Bill Ready, and Selectman James Banda, who were among the guests.

KARTUZ GREENHOUSES: Of Chestnut prize winning display exhibited recently at the Boston Flower Show. The shade house was designed and built by Reggie and Bruce Bishop and Gerry Stevens, all of Wilmington.

FOR INSURANCE SEE
Prentiss & Parker, Inc.
ONE HAVEN STREET READING, MASS.
Opp. R.R. Depot 944-4400
OVER ONE HALF CENTURY OF SERVICE
CONTINUING THE BUSINESS OF THE LATE GOULD BUCKLE

THE WILMINGTON SPOTLIGHTERS
Proudly Presents
THREE ONE-ACT PLAYS
THE MICE HAVE BEEN DRINKING AGAIN
By Cleve Haubold
THE LONG RETREAT By Julius Saltzman
NEXT By Terrance McNally
To Be Held At The
HERBERT C. BARROWS AUDITORIUM
APRIL 7TH & 8TH at 8:00 PM

WILMINGTON DRIVING SCHOOL, INC
52 MAIN ST
NEXT D.E. CLASS APRIL 3
658-3572

Kristal Pharmacy Thrifty Coupon Sav-Ons
Always At Your Service in Illness and Health
658-2826

ALL EASTER CARDS
One Third off with this Coupon

ALL STUFFED & PLUSH ANIMALS & TOYS
20% Off with This Coupon

JUST IN TIME FOR EASTER and GRADUATION
TIMEX WATCHES
20% Off with This Coupon

BRITE WATCH BAND
And Mod Leather Straps
One Third Off with This Coupon

BABY SPECIAL $ 1.00 OFF
- ALL LANOKIN BABY SETS -

25% OFF ON ALL PIPES
With This Coupon

POLAROID COLOR FILM Type 108
Reg. $5.25 - 2 for $7.98

Kristal Pharmacy - Prescription Specialists
Always Just as Close as Your Phone - 658-2826

Rte. 129
LOWELL STREET
AT WOBURN

KRISTAL PHARMACY

658-2826

LET US FILL YOUR NEXT PRESCRIPTION
THE FULL SERVICE DRUGSTORE - OPEN DAILY 9 AM TO 9 PM

IT'S YOURS FREE!

THIS LOVELY IMPORTED
"Petal Bright"
LADIES UMBRELLA

Here's All You Do . Simply open a new account for $25 or more, or add $25 or more to a present account, and you'll receive a beautiful umbrella in your choice of six gay colors as our gift.

CHECK THIS TOP-QUALITY WORKMANSHIP
* 31" sturdy metal shaft
* 10 metal ribs
* two-tone handle
* 38" dia. vinyl canope
* two lock catches
* individually wrapped in polybag

AVAILABLE IN 6 CAREFREE COLORS
red, white, black, blue, green, yellow

UMBRELLA OFFER GOOD ONLY WHILE SUPPLY LASTS

DON'T MISS OUT!
(IT MAY RAIN TOMORROW)

'THE BANK YOU KNOW AND CAN DEPEND ON'

FREE GIFT OFFER GOOD AT BOTH OFFICES

READING Savings Bank
READING 944-5000 WILMINGTON 658-4000